XREF LIST
Ltscale: 1
Resolved
TTBLK
VicMap

COUNTY ROAD PROJECT No. 2626

HARPER ESTUARY BARRIER CORRECTION

SECTION 2, TOWNSHIP 23 NORTH, RANGE 2 EAST, W.M.

FEDERAL AID #: PROTECT–2018(064)

CONTRACT TA #:

SHEET INDEX

SHEET INDEX

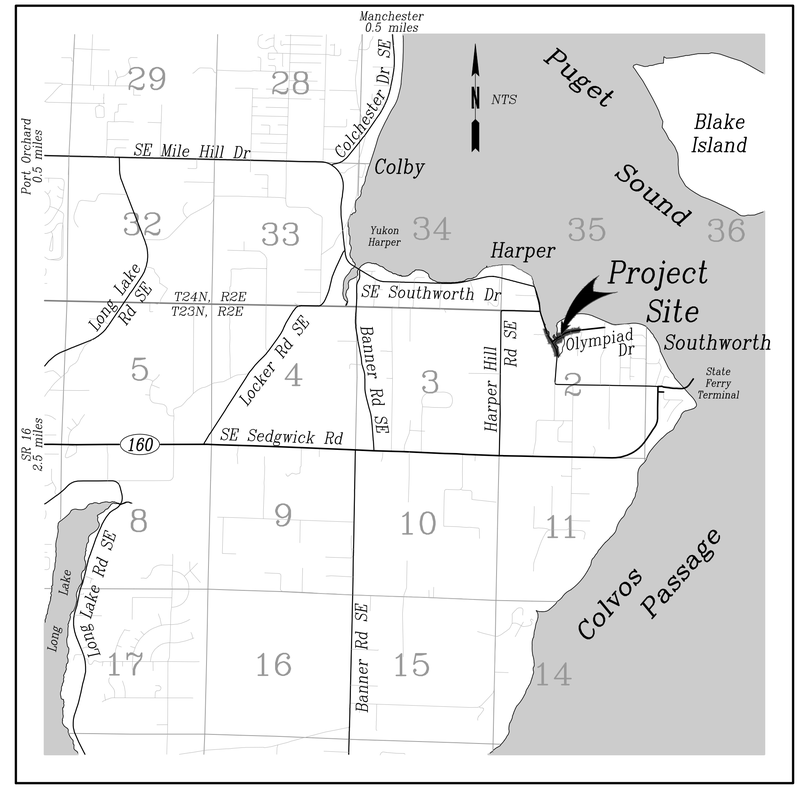

VICINITY MAP

811 Know what's below. Call before you dig.

Otak
11241 Willows Road NE, Suite 200
Redmond, WA 98052
425.822.4446
www.otak.com

BID SET

APPROVED FOR CONSTRUCTION:

DATE JOSEPH P. RUTAN, P.E., COUNTY ENGINEER

BOARD OF COMMISSIONERS:

Christine Rolfes, Commissioner
Charlotte Garrido, Commissioner
Katherine T. Walters, Commissioner

COUNTY ROAD ENGINEER

Joseph P. Rutan, P.E.

KITSAP COUNTY
DEPT. OF PUBLIC WORKS
614 DIVISION STREET MS–26
PORT ORCHARD, WA 98366
TEL:(360) 337–5777 FAX:(360) 337–4867

HARPER ESTUARY BARRIER CORRECTION

COVER SHEET

SDAP #: ___

DATE 08/28/24

Sheet G01 1 of 55

LEGEND

DESCRIPTION	EXISTING	PROPOSED
BUILDING		
BURIED CABLE	BC	BC
BURIED POWER	BP	BP
BURIED TELEPHONE	BT	BT
CLEARING LIMITS		
CONSTRUCTION CENTERLINE		
CONTOUR INTERMEDIATE	4	99
CONTOUR INDEX	100	100
DITCH		
EASEMENT		
EDGE OF PAVEMENT		
EDGE OF GRAVEL ROAD OR DRIVE		
FENCE	X	X
FIBER OPTIC		FO
GAS	G	G
GOV MEANDER LINE		
GUARDRAIL		
HIGH VISIBILITY FENCE		
LANE STRIPING		
MEAN HIGHER HIGH WATER		MHHW
ORDINARY HIGH WATER	OHW	
OVERHEAD COMM	OCM	OCM
OVERHEAD POWER	OP	OP
OVERHEAD POWER & CABLE	OPC	OPC
OVERHEAD POWER & TELEPHONE	OPT	OPT
OVERHEAD POWER, CABLE, & TELEPHONE	OPCT	
OVERHEAD TELEPHONE	OT	OT
PIPE REMOVAL		
PROPERTY LINE		
QUARTER SECTION LINE		
RETAINING WALL		
ROADWAY CENTERLINE		
RIGHT-OF-WAY CENTERLINE		
RIGHT-OF-WAY MARGIN		
SANITARY FORCE MAIN	SSFM	SSFM
SANITARY SEWER (GRAVITY)	S	S
SECTION LINE		
SILT FENCE		X X X X
STORM DRAIN ABANDONMENT		
STORM PIPE/CULVERT		
THREAD OF CHANNEL		
TOE OF SLOPE TOPOGRAPHY	TOE	
TOP OF SLOPE TOPOGRAPHY	TOP	
UNDERGROUND COMM	C	
UNDERGROUND POWER	P	
VEGETATION		
WATER	W	
WETLAND		
CREEK OR STREAMBED		
ASPHALT PAVEMENT		
CONCRETE SURFACE		
GRAVEL SURFACE		
RIPRAP		
STREAMBED GRAVEL		
STREAMBED SEDIMENT		

DESCRIPTION	EXISTING	PROPOSED
BOLLARD		
CATCH BASIN / MANHOLE		
COMMUNICATION HANDHOLE		
CLEAN OUT		
COUPLING		
FIRE HYDRANT		
LUMINAIRE		
MAILBOX	MB	
MONUMENT IN CASE		
ORDINARY HIGH WATER FLAG		
POTHOLE LOCATION		
POWER TRANSFORMER		
PROPERTY CORNER		
ROCKERY WALL		
SANITARY MANHOLE	S	
SIGN		
SIGNED DETOUR ROUTE		
SPRINKLER HEAD		
STORM DRAIN INLET PROTECTION		
SURVEY CONTROL POINT		
SURVEY MONUMENT		
SURVEY SYMBOL		
TAX PARCEL NUMBER	1234	
TAX PARCEL OWNER	JOHN DOE	
TEE		
TELEPHONE MANHOLE		
TEST PIT/SOIL SAMPLE		
THRUST BLOCK		
TRAFFIC HANDHOLE	T	
TREE		
TREE REMOVAL		
TYPE III BARRICADE		
UTILITY POLE		
WATER FOUNTAIN	IR	
WATER METER	W	
WATER VALVE		
LOG BARRIER		

SEE APPLICABLE DISCIPLINE FOR ADDITIONAL LEGEND

ABBREVIATIONS

AC	ASBESTOS CONCRETE
AP	ANGLE POINT
APPROX.	APPROXIMATE
ASSY	ASSEMBLY
ASTM	AMERICAN SOCIETY FOR TESTING AND MATERIALS
BK.	BACK
BLDG	BUILDING
B.O.F.	BOTTOM OF FOOTING
B.O.W.	BOTTOM OF WALL
BRG	BEARING
BTM	BOTTOM
BTWN	BETWEEN
BVCE	BEGIN VERTICAL CURVE ELEVATION
BVCS	BEGIN VERTICAL CURVE STATION
CB	CATCH BASIN
CCP	CONCRETE CYLINDER PIPE
C.G.	CENTER OF GRAVITY
C.I.P	CAST IN PLACE
℄	CENTERLINE
CLR.	CLEARANCE
CMP	CORRUGATED METAL PIPE
CO	CLEAN OUT
COMM	COMMUNICATION
CONC.	CONCRETE
CONST.	CONSTRUCTION
CONT.	CONTINUE OR CONTINUOUS
CPEP	CORRUGATED POLYETHYLENE PIPE
CSBC	CRUSHED SURFACING BASE COURSE
CSL	CROSSHOLE SONIC LOGGING
CSTC	CRUSHED SURFACING TOP COURSE
CTRL	CONTROL
DI	DUCTILE IRON
DIAM.	DIAMETER
DWG	DRAWING
DWY	DRIVEWAY
E	EAST
EA	EACH
ELEV. OR EL.	ELEVATION
EMBED.	EMBEDMENT
ESMT	EASEMENT
EVCE	END VERTICAL CURVE ELEVATION
EVCS	END VERTICAL CURVE STATION
EXIST.	EXISTING
EXP.	EXPANSION
FD	FOUND
FG	FINISH GRADE
FIG.	FIGURE
FL	FLOW LINE (ELEVATION) OR FLANGE
FOC	FACE OF CURB
FT	FOOT OR FEET
FTG.	FOOTING
GALV.	GALVANIZED
G.E. OR GR EL	GRATE ELEVATION
GIR.	GIRDER
GRVL	GRAVEL
GRW	GEOSYNTHETIC RETAINING WALL
HDPE	HIGH DENSITY POLYETHYLENE
HMA	HOT MIX ASPHALT
HORZ.	HORIZONTAL
HP	HIGH PRESSURE OR HIGH POINT
ID	INSIDE DIAMETER
IE	INVERT ELEVATION
JT.	JOINT
KC	KITSAP COUNTY
LBS.	POUNDS
LF	LINEAR FEET
LT	LEFT
LVC	LENGTH OF VERTICAL CURVE
MAX.	MAXIMUM
MH	MANHOLE
MHW	MEAN HIGH WATER
MHHW	MEAN HIGH HIGH WATER
MIC	MONUMENT IN CASE
MIN.	MINIMUM
N	NORTH
NE	NORTHEAST
NO.	NUMBER
NW	NORTHWEST
O.C.	ON CENTER
O.D.	OUTSIDE DIAMETER
OHL	OVERHEAD LINE
OHW	ORDINARY HIGH WATER
PAV'T	PAVEMENT
PC	POINT OF CURVATURE
PCC	POINT OF COMPOUND CURVE
PCPS	PRECAST/PRESTRESS
PCMS	PORTABLE CHANGEABLE MESSAGE SIGN
P.E.	PLAIN END OR POLYETHYLENE
PI	POINT OF INTERSECTION
PP	POLYPROPYLENE
P	PROPERTY OR PLATE
PRC	POINT OF REVERSE CURVE
PROP.	PROPOSED
P.S.	PRE-STRESS
PSI	POUND PER SQUARE INCH
P.T.	POST-TENSION
PT	POINT OF TANGENCY OR POINT
PVC	POLYVINYL CHLORIDE
PVI	POINT OF VERTICAL INTERSECTION
R	RADIUS
RCW	REINFORCED CONCRETE WALL
REF.	REFERENCE
REINF.	REINFORCED
RGS	RIGID GALVANIZED STEEL
RJ	RESTRAINED JOINT
RT	RIGHT
R/W	RIGHT-OF-WAY
S	SOUTH
SD	STORM DRAIN
SDMH	STORM DRAIN MANHOLE
SE	SOUTHEAST
SHT	SHEET
SPA.	SPACE OR SPACING
SPEC.	SPECIFICATIONS
SS	SANITARY SEWER
SSMH	SANITARY SEWER MANHOLE
STA.	STATION
STD	STANDARD
STIRR.	STIRRUPS
SW	SOUTHWEST
SYMM.	SYMMETRICAL
TEL	TELEPHONE
TEMP.	TEMPORARY
TESC	TEMP. EROSION & SEDIMENT CONTROL
TOC	TOP OF CURB
T.O.W.	TOP OF WALL
TYP.	TYPICAL
VERT.	VERTICAL
W	WEST
W/	WITH
WSDOT	WASHINGTON STATE DEPARTMENT OF TRANSPORTATION
YR.	YEAR

TIDAL DATUMS

TIDAL DATUM ARE FROM THE NATIONAL OCEANIC AND ATMOSPHERIC ADMINISTRATION (NOAA) STATION 9447130 IN SEATTLE, WA. MEAN HIGHER HIGH WATER (MHHW) ELEVATION IS APPROXIMATELY 5.44 FT NGVD29.

NOAA STATION(FT)	MLLW(FT)	NGVD29
19.3	11.4	5.4
7.9	0.0	-5.9
0.0	-7.9	-13.9

REVISIONS			
No.	BY	DATE	DESCRIPTION

SURVEYED: COUNTY
DESIGNED: _
DRAWN: _
CHECKED: _
CRP No. 2626
DATE: 08/28/24

Otak
11241 Willows Road NE, Suite 200
Redmond, WA 98052
425.822.4446
www.otak.com

LORI B. McFARLAND — STATE OF WASHINGTON — 31237 — REGISTERED PROFESSIONAL ENGINEER — 9/5/24

KITSAP COUNTY 18 57 WASHINGTON
KITSAP COUNTY
DEPT. OF PUBLIC WORKS
614 DIVISION STREET MS-26
PORT ORCHARD, WA 98366
TEL:(360) 337-5777 FAX:(360) 337-4867

HARPER ESTUARY BARRIER CORRECTION

LEGEND AND ABBREVIATIONS

KITSAP COUNTY, WASHINGTON
SECTION 2, TOWNSHIP 23 NORTH, RANGE 2 EAST, W.M.

Plotted: Aug 28, 2024 – 11:56am eva.ho O:\PROJECT\32500\32510\Dwg\01_G01-G02.dwg Layout Name: G02

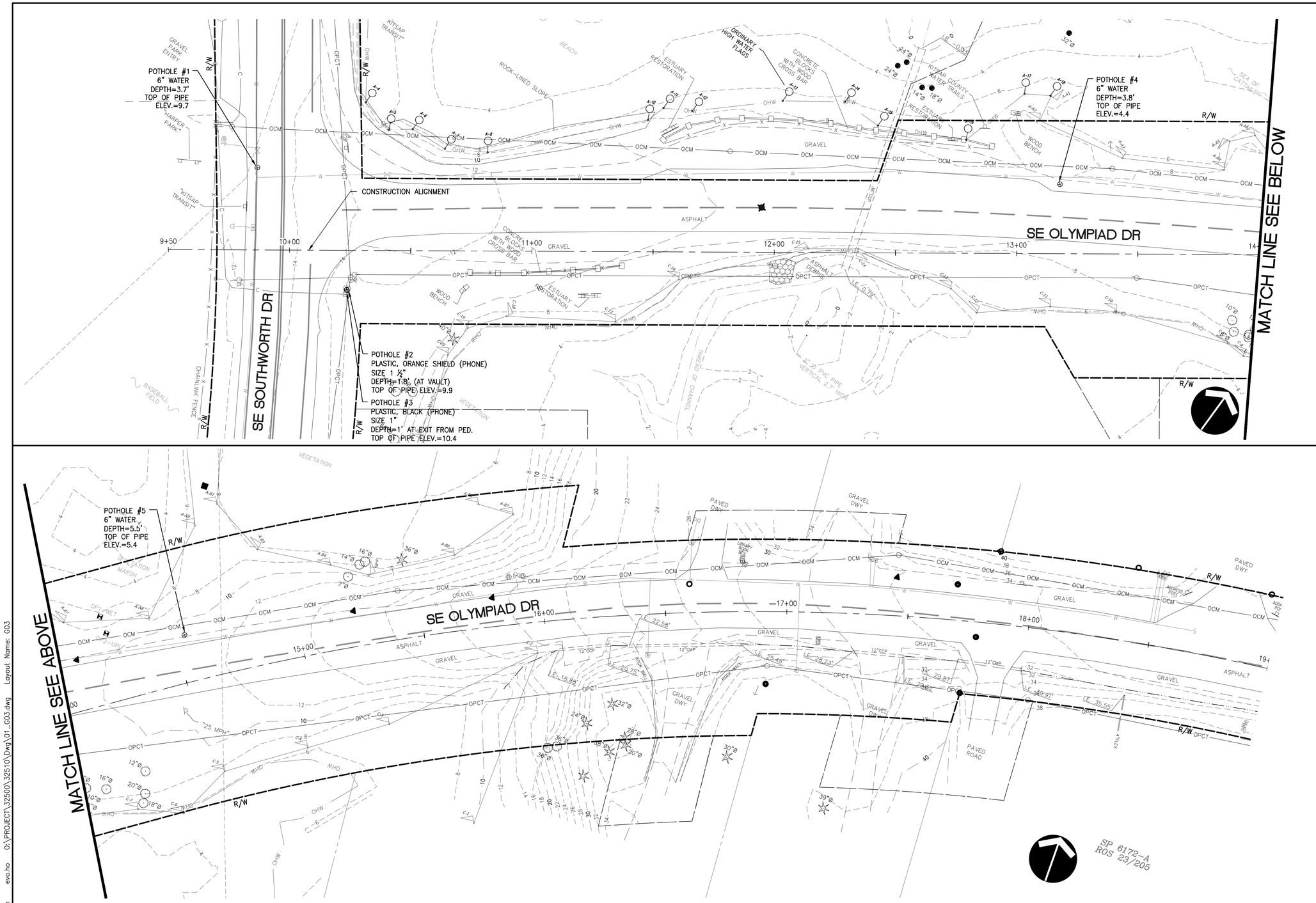

SURVEY NOTES

1. SURVEY CONTROL WAS ESTABLISHED BY KITSAP COUNTY FOR THE HARPER ESTUARY BRIDGE PROJECT DATED FEBRUARY 2015.
2. HORIZONTAL DATUM: WASHINGTON STATE PLANE COORDINATE SYSTEM, NORTH ZONE – NAD83(1991).
3. VERTICAL DATUM: NGVD29, BASED OFF OF NOAA POINT "TIDAL HARPER 5" WITH A PUBLISHED ELEVATION OF 9.623 FEET.
4. ORIGINAL TOPOGRAPHIC AND PLANIMETRIC MAPPING DATA IS BY KITSAP COUNTY DATED FROM FEBRUARY 2015–MAY 2015, AND SE OLYMPIAD DR ALIGNMENT WAS REVISED IN DECEMBER 2015. ADDITIONAL TOPOGRAPHIC COMPLETED BY KITSAP COUNTY IN AUGUST 2016 AND NOVEMBER 2023.
5. RIGHT–OF–WAY, EASEMENT AND PARCEL LINES ESTABLISHED AND SUPPLIED BY KITSAP COUNTY.

SEE DWG RW01 FOR SURVEY CONTROL TABLE

HORZ SCALE 20' 0' 20' 40' IN FEET

REVISIONS			
No.	BY	DATE	DESCRIPTION

SURVEYED: COUNTY
DESIGNED:
DRAWN:
CHECKED:
CRP No. 2626
DATE: 08/28/24

Otak
11241 Willows Road NE, Suite 200
Redmond, WA 98052
425.822.4446
www.otak.com

LORI B. McFARLAND
STATE OF WASHINGTON
31237
REGISTERED PROFESSIONAL ENGINEER
9/5/24

KITSAP COUNTY 18 57 WASHINGTON

KITSAP COUNTY
DEPT. OF PUBLIC WORKS
614 DIVISION STREET MS–26
PORT ORCHARD, WA 98366
TEL:(360) 337–5777 FAX:(360) 337–4867

HARPER ESTUARY BARRIER CORRECTION

EXISTING CONDITIONS

KITSAP COUNTY, WASHINGTON
SECTION 2, TOWNSHIP 23 NORTH, RANGE 2 EAST, W.M.

SHEET G03
3 OF 55

Plotted: Aug 28, 2024 – 11:56am evo.ho O:\PROJECT\32500\32510\Dwg\01_G03.dwg Layout Name: G03

A PORTION OF SECTION 2, TOWNSHIP 23 NORTH, RANGE 2 EAST, W.M.

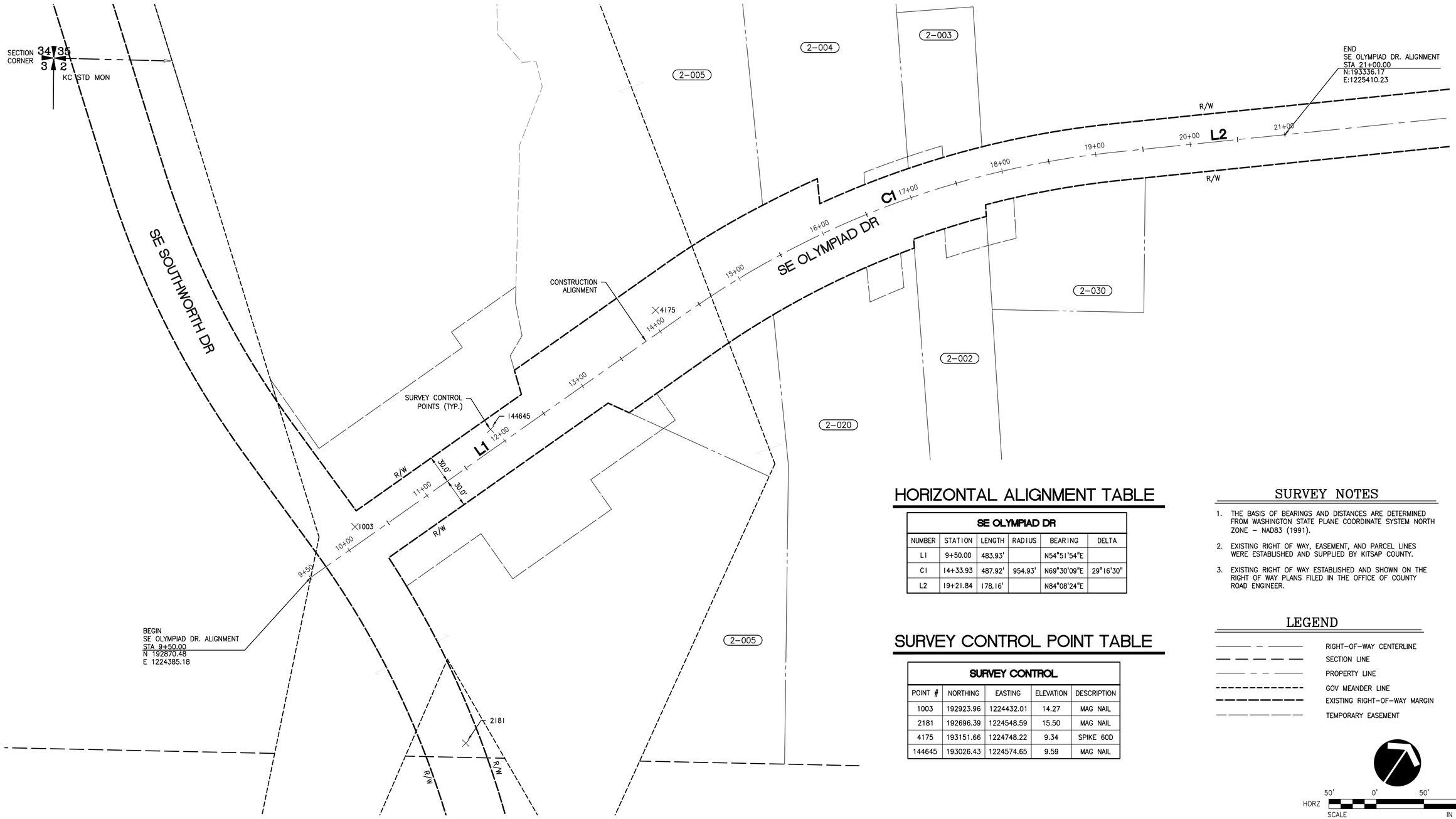

HORIZONTAL ALIGNMENT TABLE

SE OLYMPIAD DR					
NUMBER	STATION	LENGTH	RADIUS	BEARING	DELTA
L1	9+50.00	483.93'		N54°51'54"E	
C1	14+33.93	487.92'	954.93'	N69°30'09"E	29°16'30"
L2	19+21.84	178.16'		N84°08'24"E	

SURVEY CONTROL POINT TABLE

SURVEY CONTROL				
POINT #	NORTHING	EASTING	ELEVATION	DESCRIPTION
1003	192923.96	1224432.01	14.27	MAG NAIL
2181	192696.39	1224548.59	15.50	MAG NAIL
4175	193151.66	1224748.22	9.34	SPIKE 60D
144645	193026.43	1224574.65	9.59	MAG NAIL

SURVEY NOTES

1. THE BASIS OF BEARINGS AND DISTANCES ARE DETERMINED FROM WASHINGTON STATE PLANE COORDINATE SYSTEM NORTH ZONE – NAD83 (1991).
2. EXISTING RIGHT OF WAY, EASEMENT, AND PARCEL LINES WERE ESTABLISHED AND SUPPLIED BY KITSAP COUNTY.
3. EXISTING RIGHT OF WAY ESTABLISHED AND SHOWN ON THE RIGHT OF WAY PLANS FILED IN THE OFFICE OF COUNTY ROAD ENGINEER.

LEGEND

- RIGHT-OF-WAY CENTERLINE
- SECTION LINE
- PROPERTY LINE
- GOV MEANDER LINE
- EXISTING RIGHT-OF-WAY MARGIN
- TEMPORARY EASEMENT

HORZ SCALE: 50' 0' 50' 100' IN FEET

REVISIONS			
No.	BY	DATE	DESCRIPTION

SURVEYED: COUNTY
DESIGNED:
DRAWN:
CHECKED:
CRP No. 2626
DATE: 08/28/24

Otak
11241 Willows Road NE, Suite 200
Redmond, WA 98052
425.822.4446
www.otak.com

LORI B. McFARLAND — STATE OF WASHINGTON — 31237 — REGISTERED PROFESSIONAL ENGINEER — 9/5/24

KITSAP COUNTY 18 57 WASHINGTON

KITSAP COUNTY
DEPT. OF PUBLIC WORKS
614 DIVISION STREET MS-26
PORT ORCHARD, WA 98366
TEL:(360) 337-5777 FAX:(360) 337-4867

HARPER ESTUARY BARRIER CORRECTION

SURVEY CONTROL AND CONSTRUCTION ALIGNMENT

KITSAP COUNTY, WASHINGTON
SECTION 2, TOWNSHIP 23 NORTH, RANGE 2 EAST, W.M.

SHEET RW01
4 OF 55

Plotted: Aug 28, 2024 – 11:56am evo.ho O:\PROJECT\32500\32510\Dwg\02_RW01.dwg Layout Name: RW01

XREF LIST
Ltscale: 1
Resolved
TTBLK
C510N036
KITSAPROAD

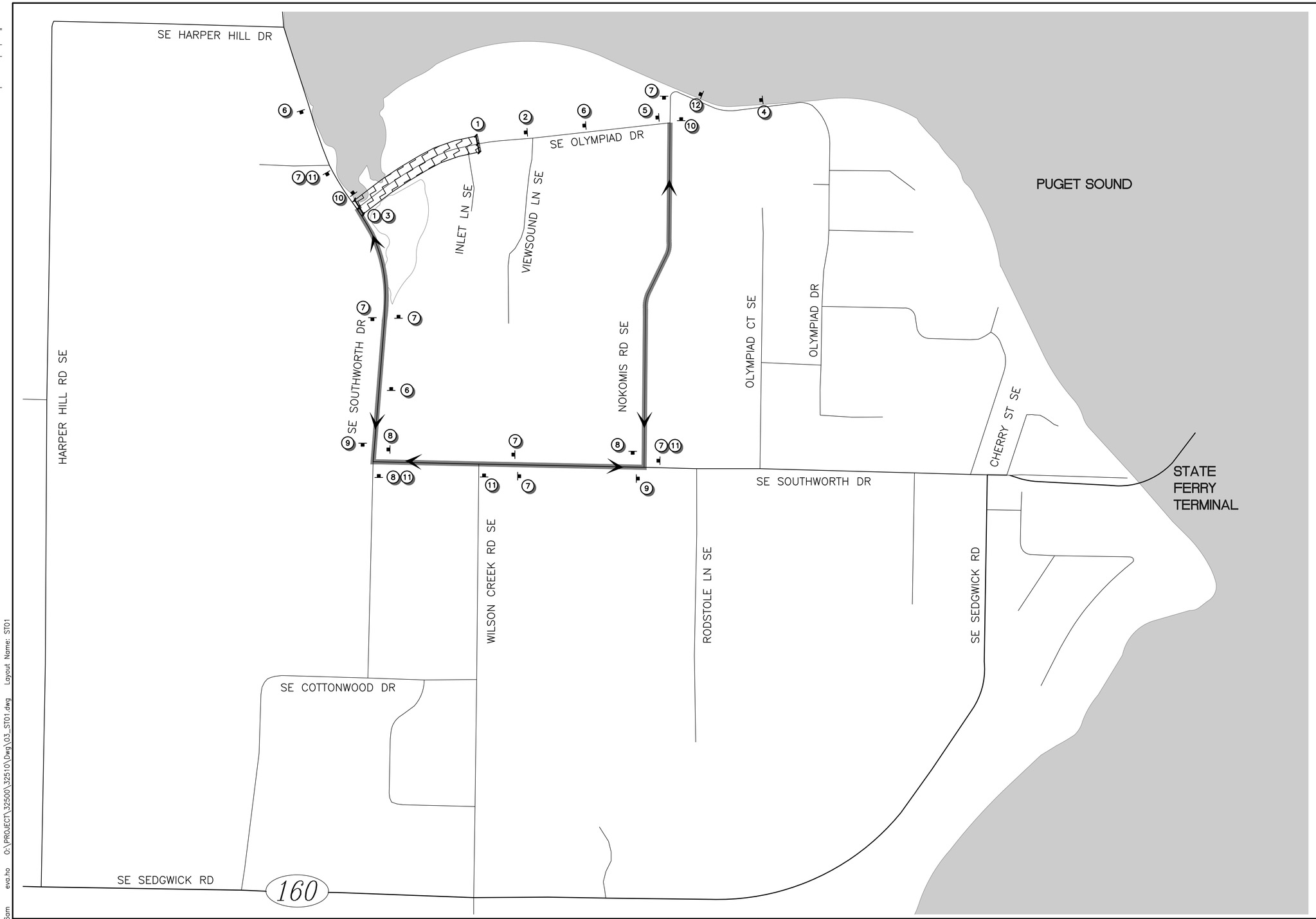

DETOUR CONSTRUCTION NOTES

1. INSTALL R11-2 "ROAD CLOSED" AND PLAQUE "CONSTRUCTION ACCESS ONLY" WITH TYPE III BARRICADE.
2. INSTALL W20-3 "ROAD CLOSED AHEAD".
3. INSTALL M4-10 "DETOUR".
4. INSTALL W20-2 "DETOUR AHEAD".
5. INSTALL R11-4 "ROAD CLOSED TO THRU TRAFFIC".
6. INSTALL W20-1 "ROAD WORK AHEAD".
7. INSTALL M4-9 "DETOUR" (UP) WITH D3-101 "SE OLYMPIAD DR".
8. INSTALL M4-9R "DETOUR ARROW" (RIGHT) WITH D3-101 "SE OLYMPIAD DR".
9. INSTALL M4-9L "DETOUR ARROW" (LEFT) WITH D3-101 "SE OLYMPIAD DR".
10. INSTALL M4-8a "END DETOUR".
11. INSTALL R11-3 (MODIFIED) "SE OLYMPIAD DR CLOSED AT SE SOUTHWORTH DR (DATE) TO (DATE) ALTERNATE ROUTE ADVISED".
12. INSTALL R11-3 (MODIFIED) "SE OLYMPIAD DR CLOSED AT NOKOMIS DR SE (DATE) TO (DATE) ALTERNATE ROUTE ADVISED". INSTALL ONE WEEK PRIOR TO CLOSURE.

DETOUR GENERAL NOTES

1. SIGN SPACING SHALL BE AS FOLLOWS:
   25/30 MPH – 200'
   35/40 MPH – 350'
2. SIGN POSITIONS SHOWN ARE NOT TO SCALE.
3. SEE WASHINGTON STATE "SIGN FABRICATION MANUAL" FOR CODE REFERENCES.
4. EXISTING MARKINGS IN CONFLICT WITH THE PROPOSED CHANNELIZATION SHALL BE REMOVED.

LEGEND

- ROAD/LANE CLOSED AREA
- SIGNED DETOUR ROUTE
- TYPE III BARRICADE
- SIGN

300' 0' 300' 600'
SCALE IN FEET

REVISIONS			
No.	BY	DATE	DESCRIPTION

SURVEYED: COUNTY
DESIGNED:
DRAWN:
CHECKED:
CRP No. 2626
DATE: 08/28/24

Otak
11241 Willows Road NE, Suite 200
Redmond, WA 98052
425.822.4446
www.otak.com

LORI B. McFARLAND — STATE OF WASHINGTON — 31237 — REGISTERED PROFESSIONAL ENGINEER — 9/5/24

KITSAP COUNTY 18 57 WASHINGTON

KITSAP COUNTY
DEPT. OF PUBLIC WORKS
614 DIVISION STREET MS-26
PORT ORCHARD, WA 98366
TEL:(360) 337-5777 FAX:(360) 337-4867

HARPER ESTUARY BARRIER CORRECTION

DETOUR PLAN

KITSAP COUNTY, WASHINGTON
SECTION 2, TOWNSHIP 23 NORTH, RANGE 2 EAST, W.M.

SHEET ST01
5 OF 55

Plotted: Aug 28, 2024 – 11:56am evo.ho 0:\PROJECT\32500\32510\Dwg\03_ST01.dwg Layout Name: ST01

XREF LIST
Ltscale: 1

Resolved
TTBLK
C510R270
HARPER
WDFW_PROPOSED
C510W360
C510U620
C510G421
T510X800
T510X370

Unresolved
C510N031
C510G460

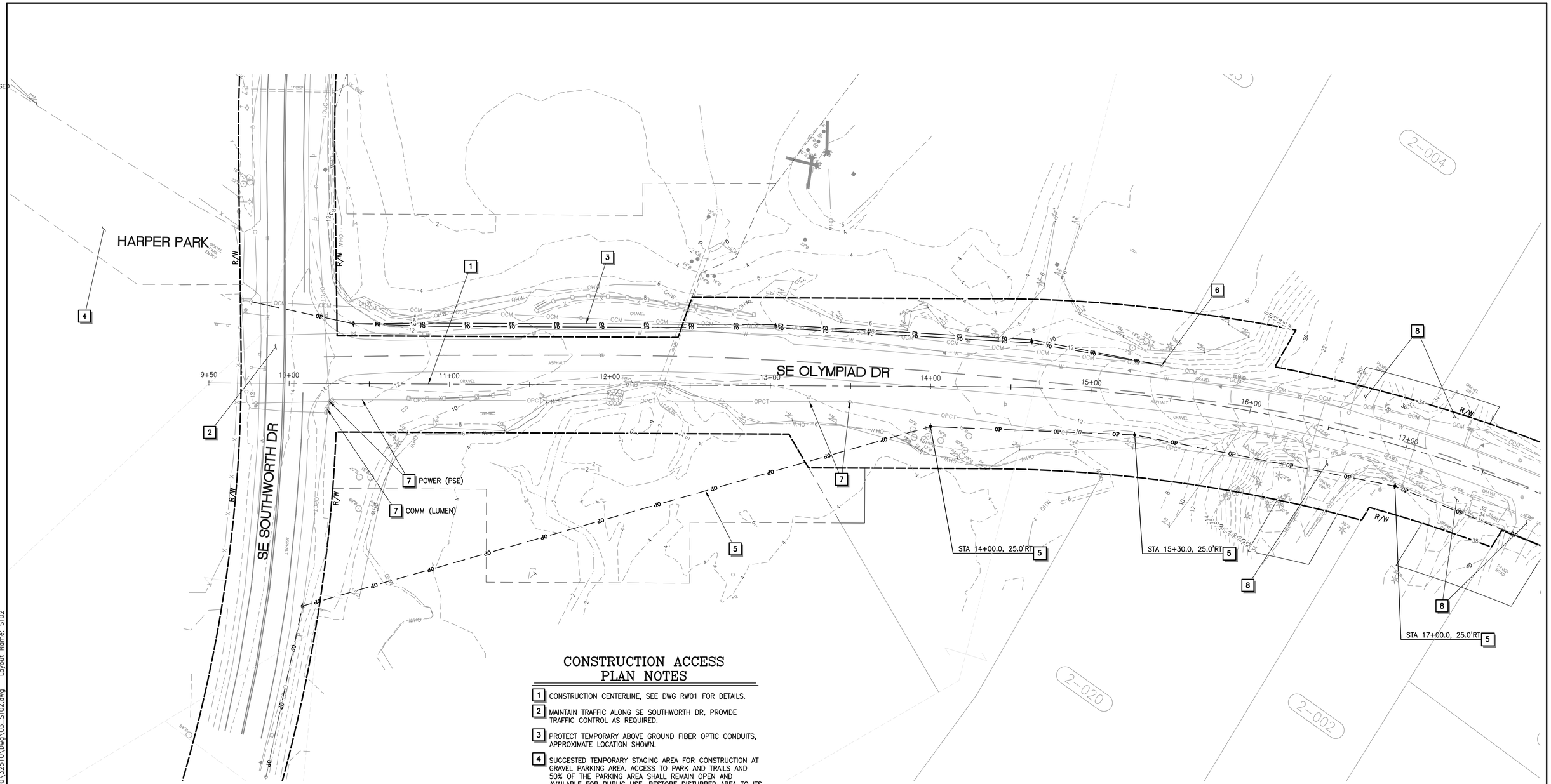

CONSTRUCTION ACCESS PLAN NOTES

1. CONSTRUCTION CENTERLINE, SEE DWG RW01 FOR DETAILS.
2. MAINTAIN TRAFFIC ALONG SE SOUTHWORTH DR, PROVIDE TRAFFIC CONTROL AS REQUIRED.
3. PROTECT TEMPORARY ABOVE GROUND FIBER OPTIC CONDUITS, APPROXIMATE LOCATION SHOWN.
4. SUGGESTED TEMPORARY STAGING AREA FOR CONSTRUCTION AT GRAVEL PARKING AREA. ACCESS TO PARK AND TRAILS AND 50% OF THE PARKING AREA SHALL REMAIN OPEN AND AVAILABLE FOR PUBLIC USE. RESTORE DISTURBED AREA TO ITS ORIGINAL OR BETTER SURFACE CONDITION WHEN CONSTRUCTION IS COMPLETE.
   STAGING PLAN MUST BE SUBMITTED TO THE ENGINEER FOR APPROVAL PRIOR TO CONSTRUCTION.
5. APPROXIMATE LOCATION OF RELOCATED POLE AND OVERHEAD POWER LINE BY OTHERS. PROTECT DURING CONSTRUCTION.
6. PROTECT EXISTING UTILITY POLE.
7. EXISTING UTILITY TO BE RELOCATED/REMOVED BY OTHERS.
8. ALLOW ACCESS TO LOCAL DRIVEWAYS.

REVISIONS			
No.	BY	DATE	DESCRIPTION

SURVEYED: COUNTY
DESIGNED: DAS
DRAWN: AK
CHECKED: GSL
CRP No. 2626
DATE: 08/28/24

Otak
11241 Willows Road NE, Suite 200
Redmond, WA 98052
425.822.4446
www.otak.com

LORI B. McFARLAND
STATE OF WASHINGTON
31237
REGISTERED PROFESSIONAL ENGINEER
9/5/24

KITSAP COUNTY
DEPT. OF PUBLIC WORKS
614 DIVISION STREET MS-26
PORT ORCHARD, WA 98366
TEL:(360) 337-5777 FAX:(360) 337-4867

HARPER ESTUARY BARRIER CORRECTION

CONSTRUCTION ACCESS PLAN

KITSAP COUNTY, WASHINGTON
SECTION 2, TOWNSHIP 23 NORTH, RANGE 2 EAST, W.M.

Plotted: Aug 28, 2024 – 11:57am evo.ho O:\PROJECT\32500\32510\Dwg\03_ST02.dwg Layout Name: ST02

XREF LIST
Ltscale: 1
Resolved
TTBLK
C510R270
HARPER
C510N031
C510G460
WDFW_PROPOSED

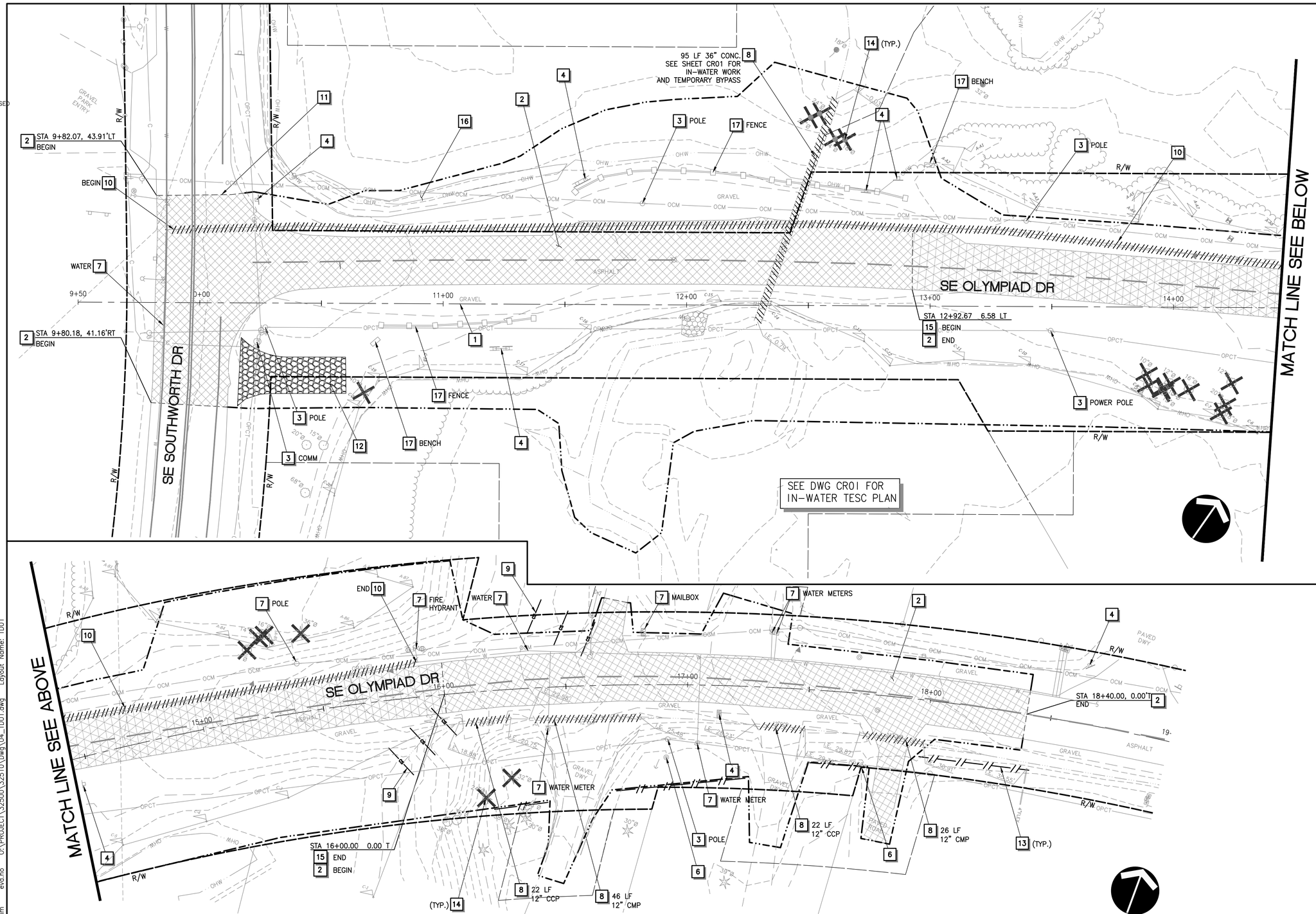

TESC CONSTRUCTION NOTES

1. CONSTRUCTION CENTERLINE, SEE DWG RW01 FOR DETAILS.
2. SAWCUT AND REMOVE EXISTING PAVEMENT.
3. EXISTING UTILITY TO BE REMOVED/RELOCATED BY OTHERS.
4. SEE SIGNING AND STRIPING PLANS (DWG CH01) FOR SIGN REMOVAL/RELOCATION.
5. INSTALL HIGH VISIBILITY SILT FENCE WITH BACKUP SUPPORT PER WSDOT STD PLAN I-30.16-00.
6. EXISTING SURVEY MONUMENT OR PROPERTY CORNER TO BE REMOVED AND REPLACED. CONTRACTOR SHALL COORDINATE WITH KITSAP COUNTY PRIOR TO REMOVAL. KITSAP COUNTY WILL REPLACE ALL DISTURBED MONUMENTS.
7. EXISTING FEATURES OR STRUCTURES TO REMAIN, PROTECT DURING CONSTRUCTION.
8. REMOVE EXISTING DRAINAGE PIPES OR STRUCTURES.
9. INSTALL A MINIMUM OF THREE COMPOST SOCKS ON SLOPE PER WSDOT STD. PLAN I-30.40-01, EXTENDING A MINIMUM OF 5' BEYOND TOP EDGE OF DITCH.
10. EXISTING WATER MAIN TO BE REMOVED, SEE DWG UT01 FOR DETAILS.
11. EXISTING PAVEMENT WITHIN SE SOUTHWORTH DRIVE (OUTSIDE OF ROAD CLOSURE AREA) SHALL NOT BE REMOVED UNTIL FINAL PAVING IS READY TO BE COMMENCED.
12. CONSTRUCT STABILIZED CONSTRUCTION ENTRANCE PER WSDOT STD. PLAN I-80.10-02.
13. INSTALL HIGH VISIBILITY FENCE PER WSDOT STD. PLAN I-10.10-01.
14. REMOVE EXISTING TREE(S).
15. PULVERIZE EXISTING PAVEMENT TO FULL DEPTH. PULVERIZED PAVEMENT SHALL BE RE-SHAPED AND COMPACTED TO 95% AND BE USED AS BASE.
16. REMOVE EXISTING RIPRAP.
17. REMOVE EXISTING FEATURE.

TESC GENERAL NOTES

1. CATCH BASIN INLET PROTECTION SHALL BE PROVIDED AND MAINTAINED AT ALL EXISTING AND PROPOSED CATCH BASIN PRIOR TO AND FOR THE DURATION OF CONSTRUCTION OPERATIONS. PROPOSED CATCH BASINS AND PROTECTION MEASURES NOT SHOWN IN PLAN FOR CLARITY.
2. LOCATION OF TESC MEASURES ARE APPROXIMATE AND SHALL BE FIELD LOCATED TO ACCOMMODATE SITE CONDITIONS AND WORK SCHEDULE.
3. ALL TREES NOT INDICATED FOR REMOVAL SHALL BE PROTECTED.
4. ORDINARY HIGH WATER (OHW) ALSO REPRESENTS WETLAND BOUNDARY.

LEGEND

- HIGH VISIBILITY FENCE
- CLEARING LIMITS
- COMPOST SOCK
- PIPE REMOVAL
- PAVEMENT/CONCRETE REMOVAL
- PAVEMENT PULVERIZING
- STABILIZED CONSTRUCTION ENTRANCE
- TREE REMOVAL

HORZ SCALE 20' 0' 20' 40' IN FEET

REVISIONS

No.	BY	DATE	DESCRIPTION

SURVEYED:	COUNTY
DESIGNED:	DAS
DRAWN:	AK
CHECKED:	GSL
CRP No.	2626
DATE:	08/28/24

Otak
11241 Willows Road NE, Suite 200
Redmond, WA 98052
425.822.4446
www.otak.com

YI HUA HO — STATE OF WASHINGTON — 52003 — REGISTERED PROFESSIONAL ENGINEER — 8/28/2024

KITSAP COUNTY 18 57 WASHINGTON
KITSAP COUNTY
DEPT. OF PUBLIC WORKS
614 DIVISION STREET MS-26
PORT ORCHARD, WA 98366
TEL:(360) 337-5777 FAX:(360) 337-4867

HARPER ESTUARY BARRIER CORRECTION

TESC AND DEMOLITION PLAN

KITSAP COUNTY, WASHINGTON
SECTION 2, TOWNSHIP 23 NORTH, RANGE 2 EAST, W.M.

Plotted: Aug 28, 2024 - 11:57am eva.ho O:\PROJECT\32500\32510\Dwg\04_TD01.dwg Layout Name: TD01

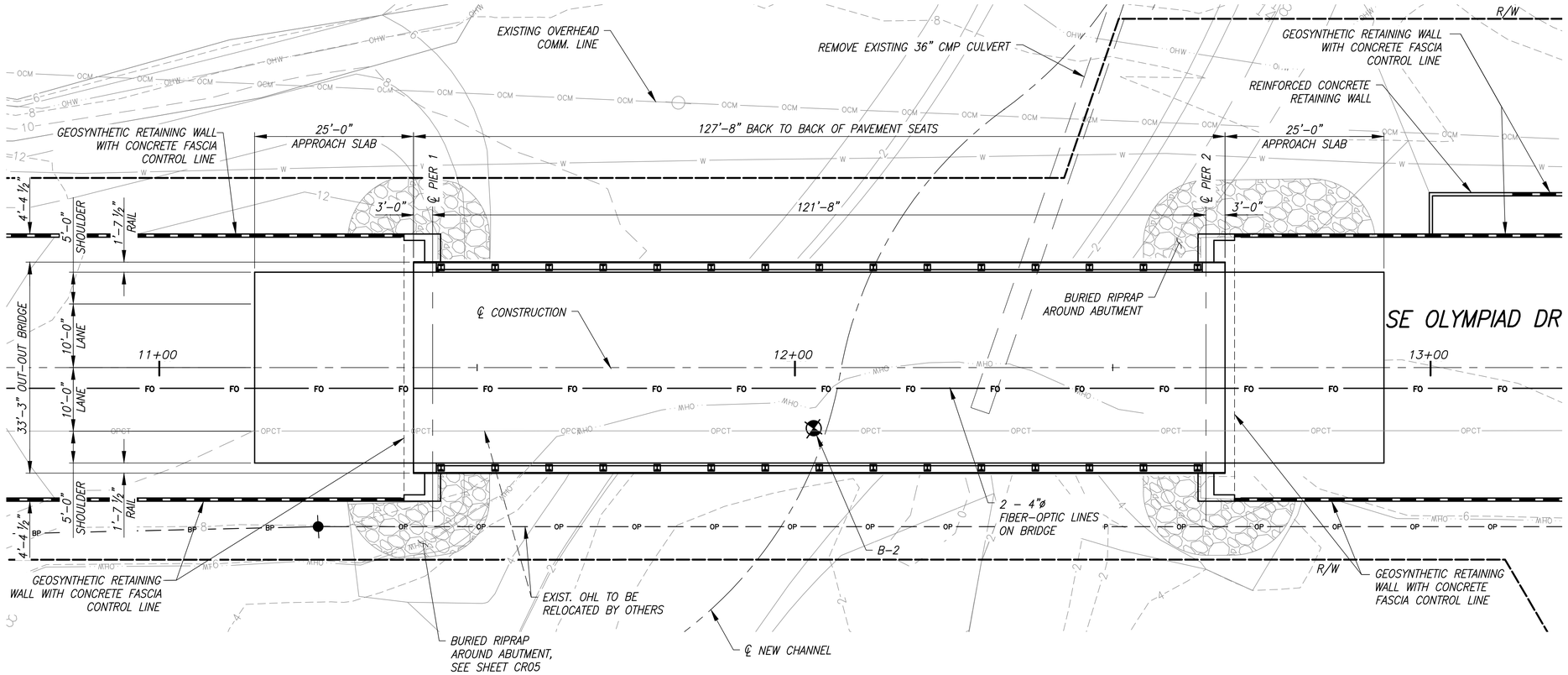

PLAN

SCALE: 1" = 10'-0"
BEARING OF PIERS NORMAL TO CONSTRUCTION ℄

GENERAL NOTES

1. ALL MATERIAL AND WORK SHALL BE IN ACCORDANCE WITH THE REQUIREMENTS OF THE WASHINGTON STATE DEPARTMENT OF TRANSPORTATION, "STANDARD SPECIFICATIONS FOR ROAD, BRIDGE AND MUNICIPAL CONSTRUCTION" 2024 EDITION AND SPECIAL PROVISIONS.
2. THIS STRUCTURE HAS BEEN DESIGNED IN ACCORDANCE WITH THE REQUIREMENTS FOR LOAD & RESISTANCE FACTOR DESIGN PER "AASHTO LRFD BRIDGE DESIGN SPECIFICATIONS, 9TH EDITION" AND THE WSDOT BRIDGE DESIGN MANUAL. THE STRUCTURE HAS BEEN DESIGNED FOR HL-93 LIVE LOAD. A 50 PSF ALLOWANCE FOR FUTURE ASPHALT OVERLAY HAS BEEN INCLUDED.
3. SEISMIC DESIGN HAS BEEN CONDUCTED IN ACCORDANCE WITH THE AASHTO GUIDE SPECIFICATIONS FOR LRFD SEISMIC BRIDGE DESIGN. SEISMIC DESIGN CRITERIA: As = 0.488G, SDI = .603, SDS = 1.134 (7% EXCEEDANCE IN 75 YEARS), SITE CLASSIFICATION "D", AND SEISMIC DESIGN CATEGORY D. SEISMIC DESIGN INCLUDES LIQUEFACTION AND LATERAL SPREAD FORCES PER GEOTECHNICAL REPORT.
4. UNLESS OTHERWISE SHOWN ON PLANS, CONCRETE COVER MEASURED FROM FACE OF CONCRETE TO THE NEAREST EDGE OF ANY REINFORCEMENT BAR SHALL BE 2".
5. ALL DIMENSIONS SHOWN ARE MEASURED HORIZONTALLY OR VERTICALLY UNLESS NOTED OTHERWISE.
6. CONSTRUCTION JOINTS WILL BE ALLOWED ONLY AT THE LOCATIONS SHOWN ON THE PLANS OR AS APPROVED BY THE ENGINEER.
7. PROVIDE CONCRETE CLASS AS FOLLOWS: ROADWAY DECK – CLASS 4000D, DRILLED SHAFTS– CLASS 4000P, APPROACH SLABS – CLASS 4000A AND ALL OTHER CONCRETE TO BE CLASS 4000 UNLESS NOTED OTHERWISE.
8. PROVIDE REINFORCING STEEL ACCORDING TO ASTM A706 GRADE 60 OR ASTM A615 GRADE 60. FIELD BENT AND WELDED REINFORCING AND ALL REINFORCING IN DRILLED SHAFTS SHALL CONFORM TO ASTM A706. UNLESS NOTED OTHERWISE, MINIMUM LAP SPLICE LENGTHS SHALL BE AS FOLLOWS:

#4 BAR = 2'-0"	#4 E BAR = 2'-6"
#5 BAR = 2'-0"	#5 E BAR = 3'-0"
#6 BAR = 2'-3"	#6 E BAR = 3'-9"
#7 BAR = 2'-9"	#7 E BAR = 4'-3"
#8 BAR = 3'-3"	#8 E BAR = 4'-9"
#9 BAR = 4'-2"	#9 E BAR = 5'-6"
#10 BAR = 5-3"	#10 E BAR = 6'-0"
#11 BAR = 6'-6"	

E DENOTES EPOXY COATED BARS.

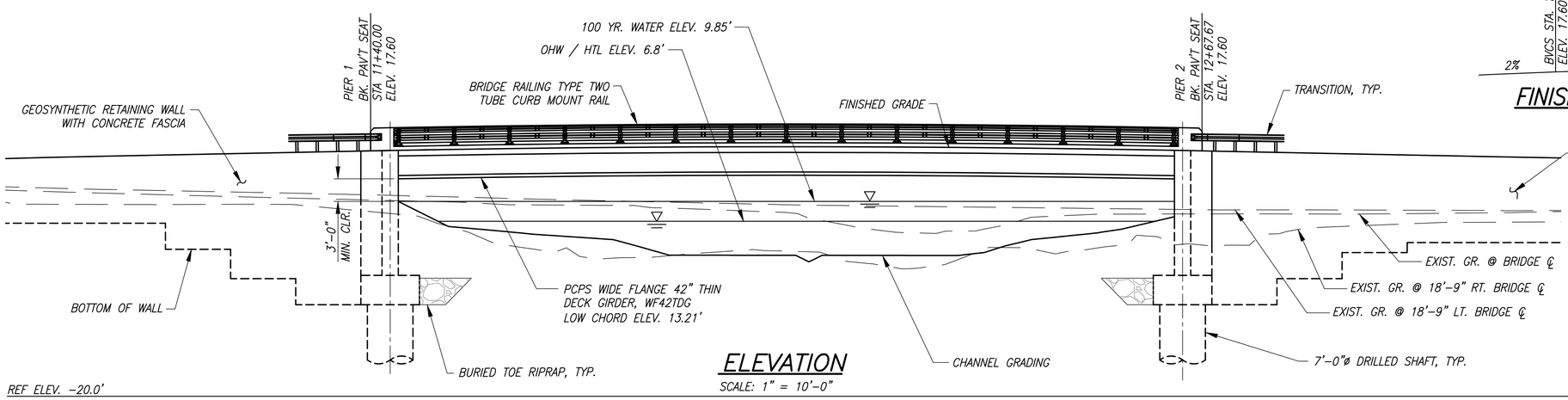

ELEVATION

SCALE: 1" = 10'-0"

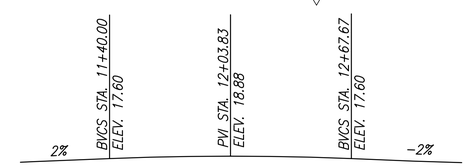

FINISH GRADE PROFILE

AT ℄ CONSTRUCTION

PCPS WF42TDG
LOADING: HL-93

DATUM

NGVD29

10' 0' 10' 20'
SCALE IN FEET

REVISIONS			
No.	BY	DATE	DESCRIPTION

SURVEYED: COUNTY
DESIGNED: MO
DRAWN: MO
CHECKED: RPD
CRP No. 2626
DATE: 08/28/24

Otak
11241 Willows Road NE, Suite 200
Redmond, WA 98052
425.822.4446
www.otak.com

ROBERT P. DOHERTY, STATE OF WASHINGTON, 43425, REGISTERED PROFESSIONAL ENGINEER
8/29/2024

KITSAP COUNTY 18 57 WASHINGTON

KITSAP COUNTY
DEPT. OF PUBLIC WORKS
614 DIVISION STREET MS-26
PORT ORCHARD, WA 98366
TEL:(360) 337-5777 FAX:(360) 337-4867

HARPER ESTUARY BARRIER CORRECTION

BRIDGE LAYOUT

KITSAP COUNTY, WASHINGTON
SECTION 2, TOWNSHIP 23 NORTH, RANGE 2 EAST, W.M.

SHEET B01
8 OF 55

Plotted: Aug 29, 2024 – 12:26pm Matt.OConnell O:\PROJECT\32500\32510\Dwg\05_B01.dwg Layout Name: B01

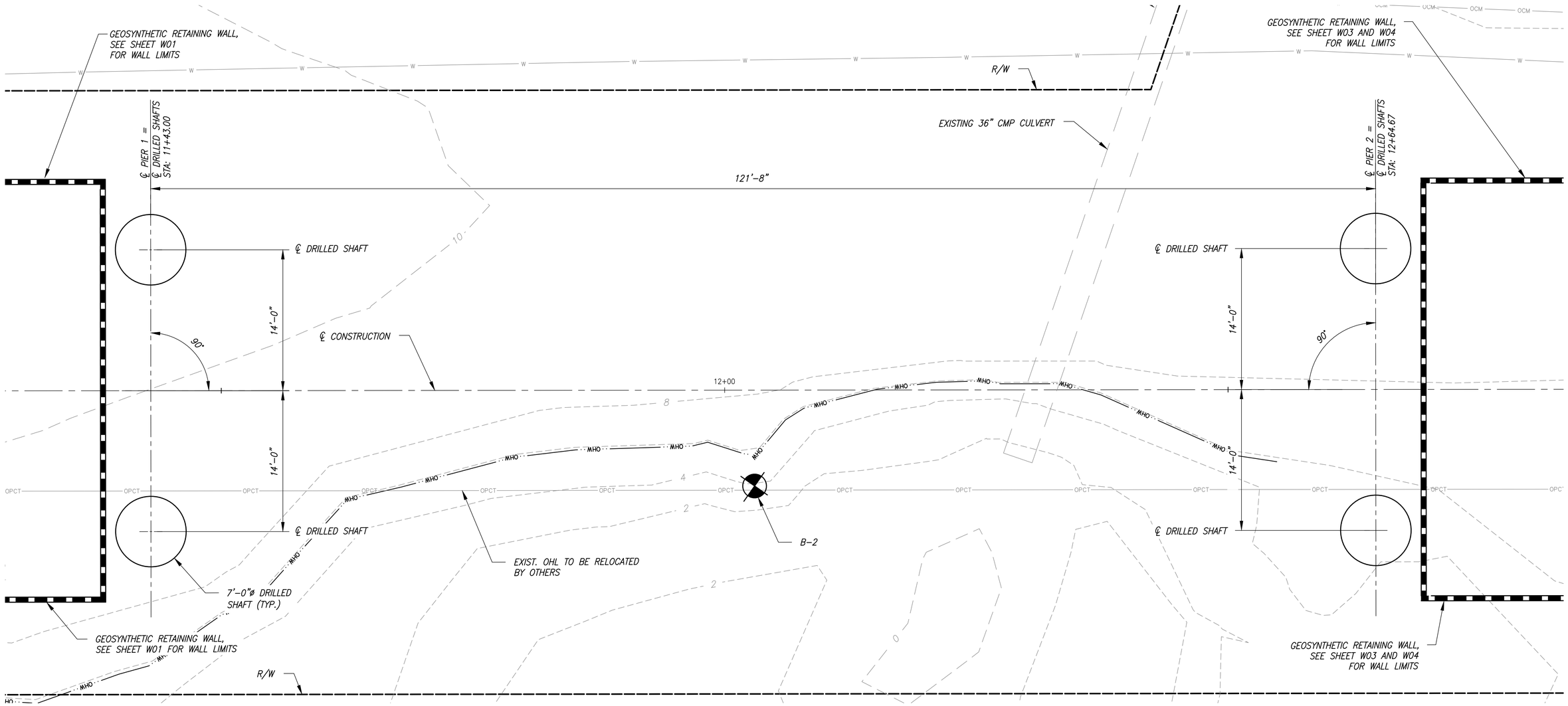

FOUNDATION LAYOUT

SCALE: 1" = 5'-0"
*SEE GEOTECHNICAL REPORT AND ADDENDUM PREPARED BY ASPECT CONSULTING DATED JULY 21, 2015 AND MAY 12, 2017, RESPECTIVELY, FOR BORING LOCATIONS AND SUBSURFACE CONDITIONS

NOMINAL SHAFT RESISTANCE, UNFACTORED (KIPS)

		END BEARING RESISTANCE	SKIN FRICTION RESISTANCE	UPLIFT RESISTANCE
SERVICE LIMIT STATE	PIER 1	1700	2900	2900
	PIER 2	1700	2900	2900
STRENGTH LIMIT STATE	PIER 1	1700	2900	2900
	PIER 2	1700	2900	2900
EXTREME EVENT LIMIT STATE	PIER 1	1700	2500	2500
	PIER 2	1700	2500	2500

REVISIONS			
No.	BY	DATE	DESCRIPTION

SURVEYED: COUNTY
DESIGNED: MO
DRAWN: MO
CHECKED: RPD
CRP No. 2626
DATE: 08/28/24

Otak
11241 Willows Road NE, Suite 200
Redmond, WA 98052
425.822.4446
www.otak.com

ROBERT P. DOHERTY, STATE OF WASHINGTON, 43425, REGISTERED PROFESSIONAL ENGINEER
8/29/2024

KITSAP COUNTY 18 57 WASHINGTON

KITSAP COUNTY
DEPT. OF PUBLIC WORKS
614 DIVISION STREET MS-26
PORT ORCHARD, WA 98366
TEL:(360) 337-5777 FAX:(360) 337-4867

HARPER ESTUARY BARRIER CORRECTION
FOUNDATION LAYOUT
KITSAP COUNTY, WASHINGTON
SECTION 2, TOWNSHIP 23 NORTH, RANGE 2 EAST, W.M.

SHEET B02
9 OF 55

Plotted: Aug 29, 2024 - 11:12am Matt.OConnell O:\PROJECT\32500\32510\Dwg\05_B02.dwg Layout Name: B02

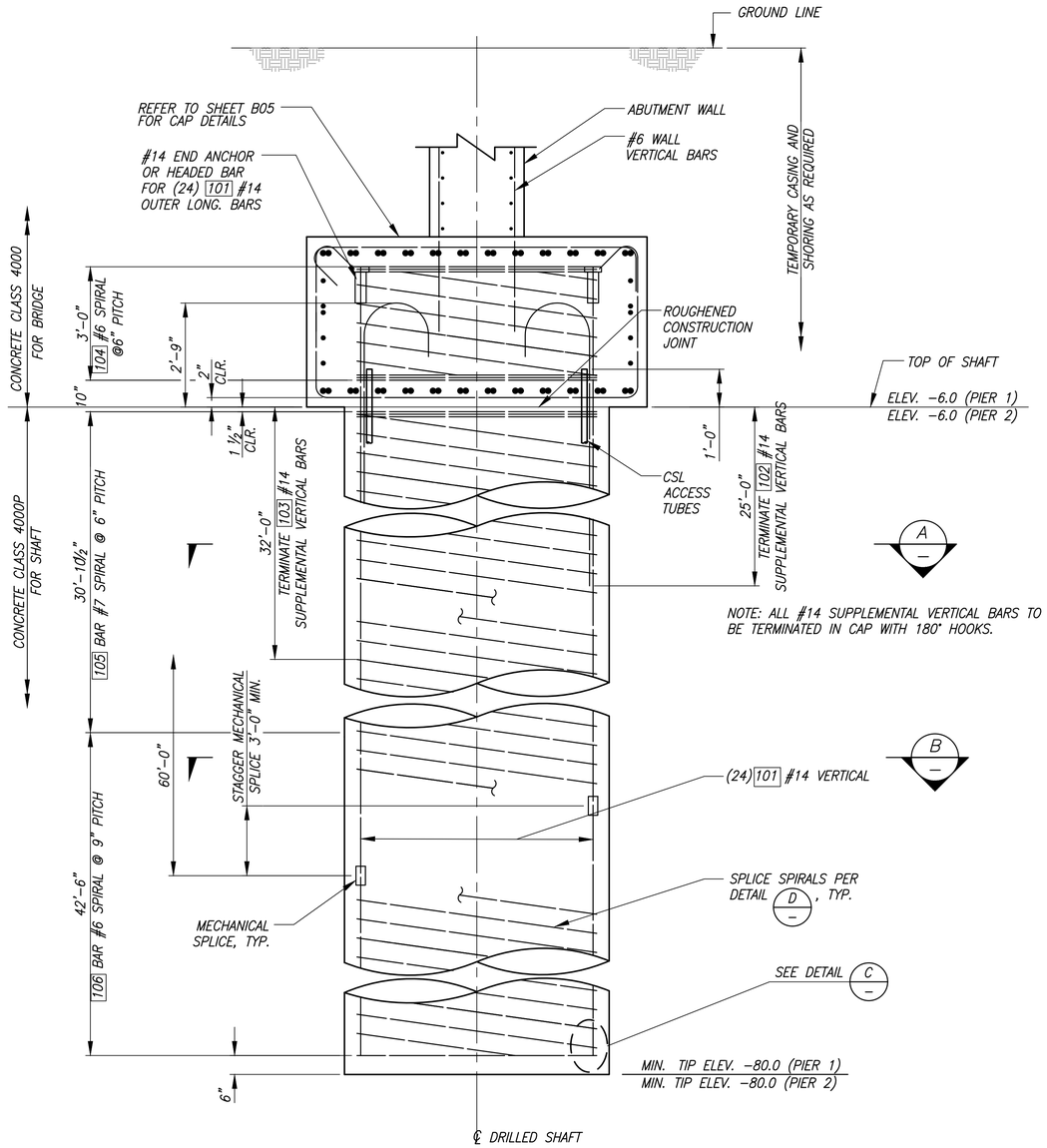

DRILLED SHAFT DETAIL AT PIERS 1 AND 2

SCALE: 1/2" = 1'-0"

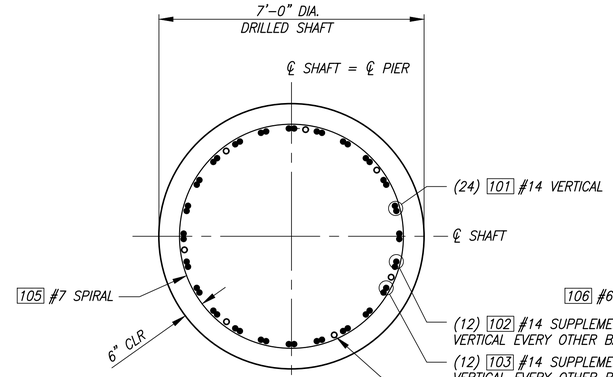

SECTION A

N.T.S.

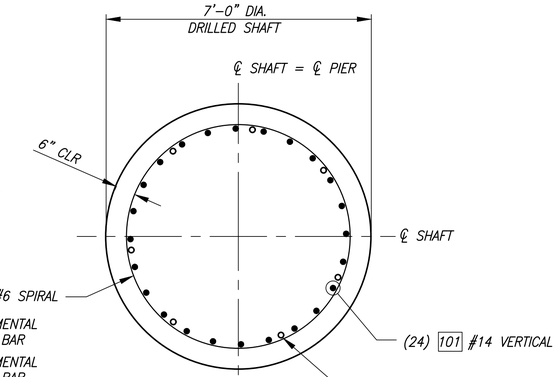

SECTION B

N.T.S.

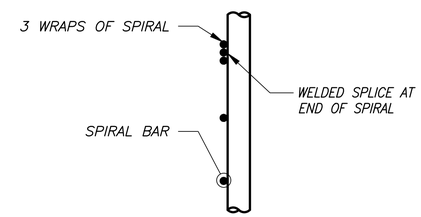

SPIRAL TERMINATION DETAIL C

N.T.S.
TYPICAL ALL SPIRAL TERMINATIONS

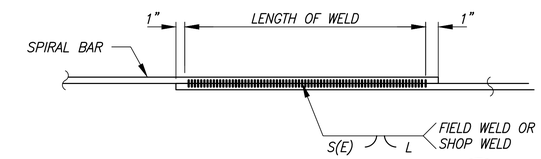

WELDED LAP SPLICED DETAIL D

N.T.S.
WELDING SHALL MEET THE REQUIREMENTS OF STD. SPEC. 6-02.3(24)E
FOR WELD DIMENSIONS, SEE TABLE BELOW.

	BAR SIZE	WELD DIMENSIONS (IN) S	E	L (LENGTH)
SPIRALS	#6	3/8	3/16	6
HOOPS	#7	7/16	1/4	7

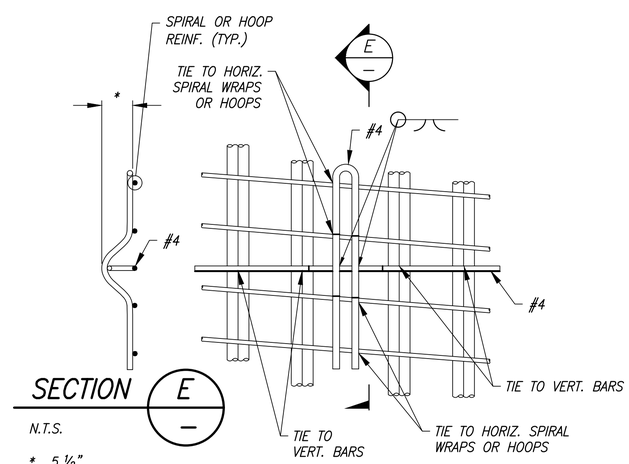

SECTION E

N.T.S.

* 5 1/2"

CENTRALIZER DETAIL

CENTRALIZER NOTES:

1. CENTRALIZERS SHALL BE EPOXY COATED OR PAINTED WITH INORGANIC ZINC AFTER FABRICATION.
2. EACH LEG SHALL BE TIED TO TWO VERTICAL BAR BUNDLES AND TWO SPIRAL WRAPS OR HOOPS.
3. SEE STD. SPEC. 6-19.3(5)B FOR SPACING.

REVISIONS			
No.	BY	DATE	DESCRIPTION

SURVEYED: COUNTY
DESIGNED: MO
DRAWN: MO
CHECKED: RPD
CRP No. 2626
DATE: 08/28/24

Otak
11241 Willows Road NE, Suite 200
Redmond, WA 98052
425.822.4446
www.otak.com

ROBERT P. DOHERTY, STATE OF WASHINGTON, 43425, REGISTERED PROFESSIONAL ENGINEER
8/29/2024

KITSAP COUNTY 18 57 WASHINGTON
KITSAP COUNTY
DEPT. OF PUBLIC WORKS
614 DIVISION STREET MS-26
PORT ORCHARD, WA 98366
TEL:(360) 337-5777 FAX:(360) 337-4867

HARPER ESTUARY BARRIER CORRECTION
DRILLED SHAFT DETAILS
KITSAP COUNTY, WASHINGTON
SECTION 2, TOWNSHIP 23 NORTH, RANGE 2 EAST, W.M.

SHEET B03
10 OF 55

Plotted: Aug 29, 2024 - 11:12am Matt.OConnell O:\PROJECT\32500\32510\Dwg\05_B03.dwg Layout Name: B03

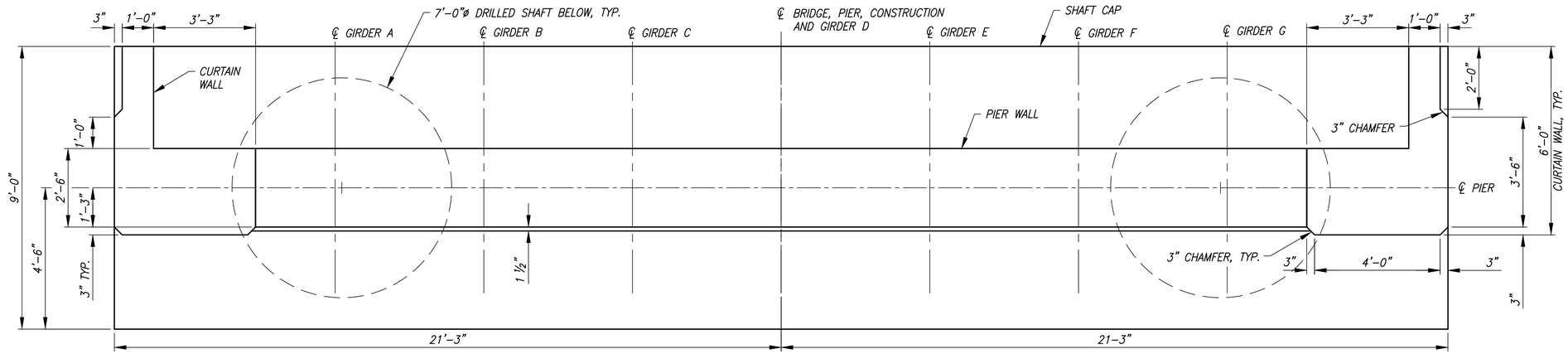

PIER PLAN

SCALE: 1/2" = 1'-0" PIER 2 SHOWN. PIER 1 SIMILAR EXCEPT AS NOTED.

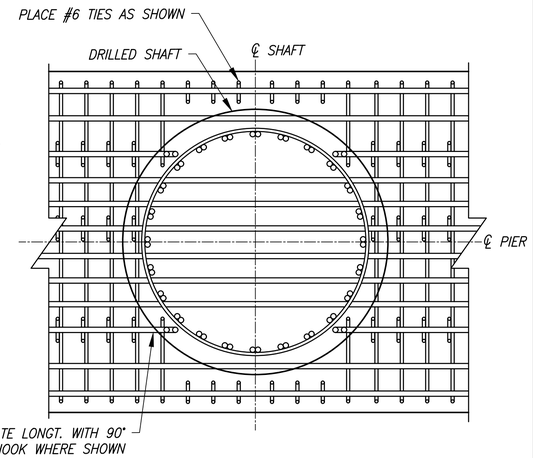

CAP REINF. AT DRILLED SHAFT

SCALE: 1/2" = 1'-0"

CAP STIRRUP AND LONGITUDINAL BAR LAYOUT AT SHAFT LOCATIONS. CONTRACTOR SHALL ENSURE PLACEMENT OF SHAFT REBAR ALLOWS PROPER PLACEMENT OF ALL CAP REBAR.

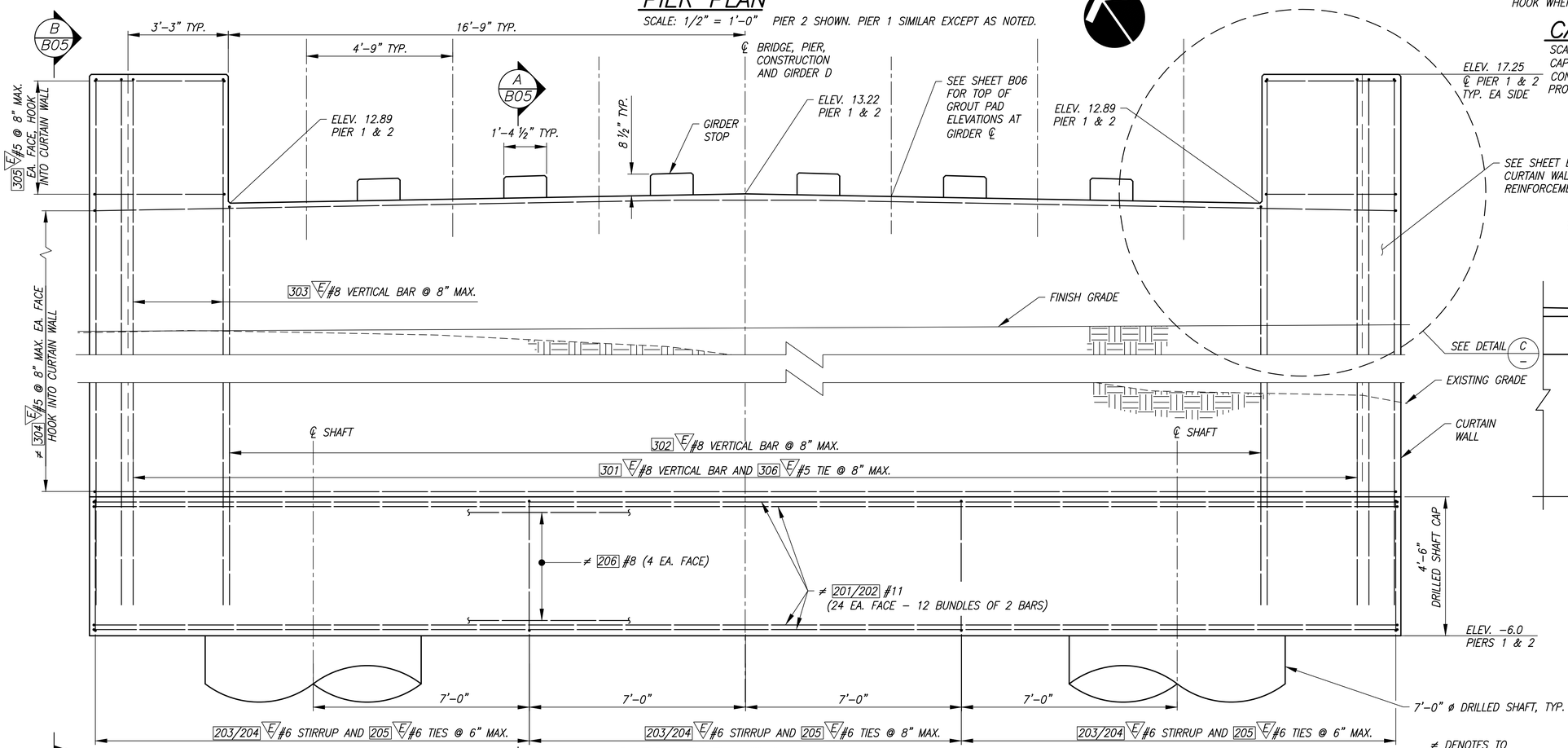

PIER ELEVATION

SCALE: 1/2" = 1'-0" PIER 2 SHOWN FACING AHEAD ON STATION. PIER 1 SIMILAR EXCEPT AS NOTED.

≠ DENOTES TO STAGGER LAP SPLICES

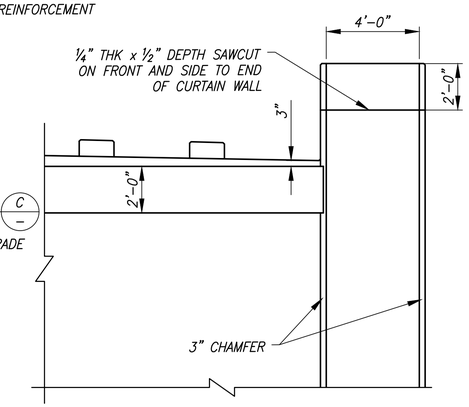

DETAIL C

NTS

REVISIONS			
No.	BY	DATE	DESCRIPTION

SURVEYED:	COUNTY
DESIGNED:	MO
DRAWN:	MO
CHECKED:	RPD
CRP No.	2626
DATE:	08/28/24

Otak
11241 Willows Road NE, Suite 200
Redmond, WA 98052
425.822.4446
www.otak.com

ROBERT P. DOHERTY, STATE OF WASHINGTON, 43425, REGISTERED PROFESSIONAL ENGINEER
8/29/2024

KITSAP COUNTY
DEPT. OF PUBLIC WORKS
614 DIVISION STREET MS-26
PORT ORCHARD, WA 98366
TEL:(360) 337-5777 FAX:(360) 337-4867

HARPER ESTUARY BARRIER CORRECTION

PIERS 1 AND 2 PLAN AND ELEVATION

KITSAP COUNTY, WASHINGTON
SECTION 2, TOWNSHIP 23 NORTH, RANGE 2 EAST, W.M.

Plotted: Aug 29, 2024 – 11:13am Matt.OConnell O:\PROJECT\32500\32510\Dwg\05_B04.dwg Layout Name: B04

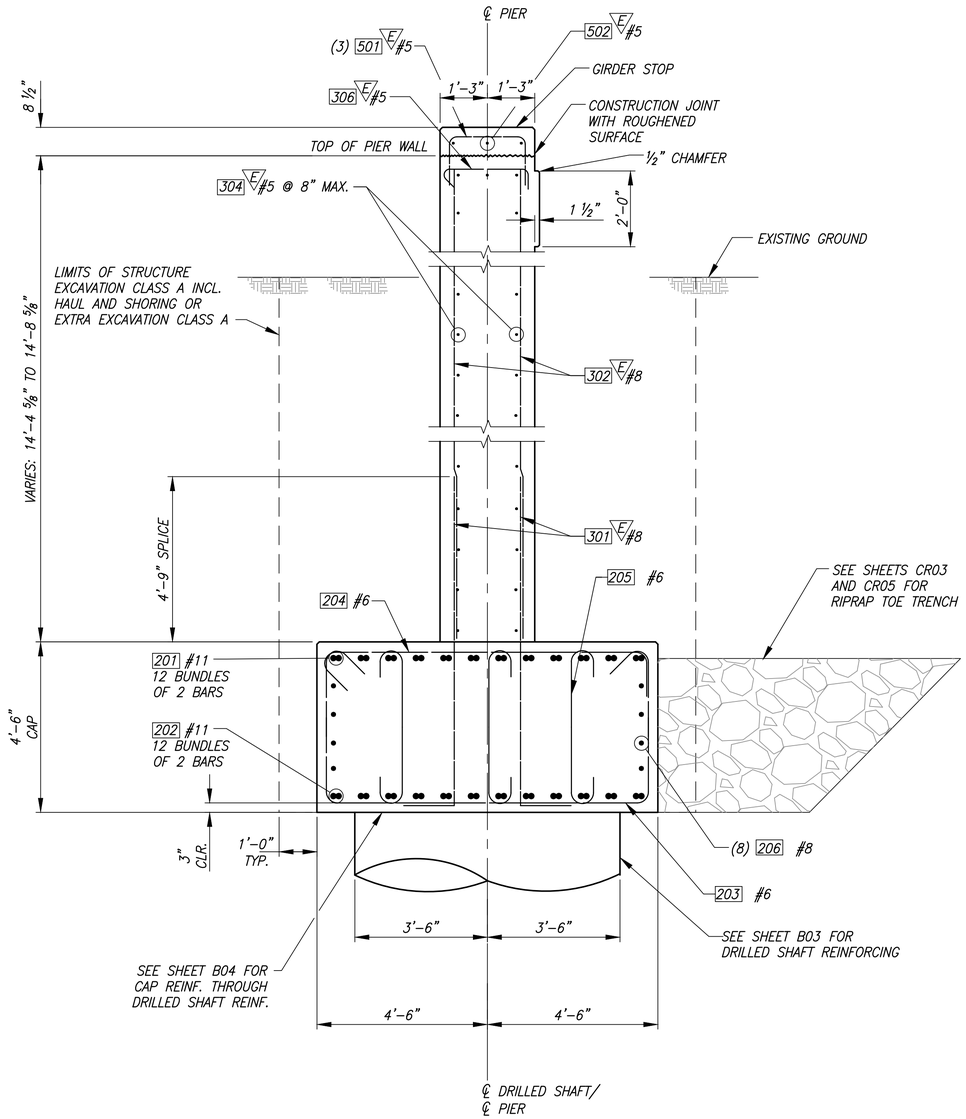

SECTION A / B04
SCALE: 1/2" = 1'-0"

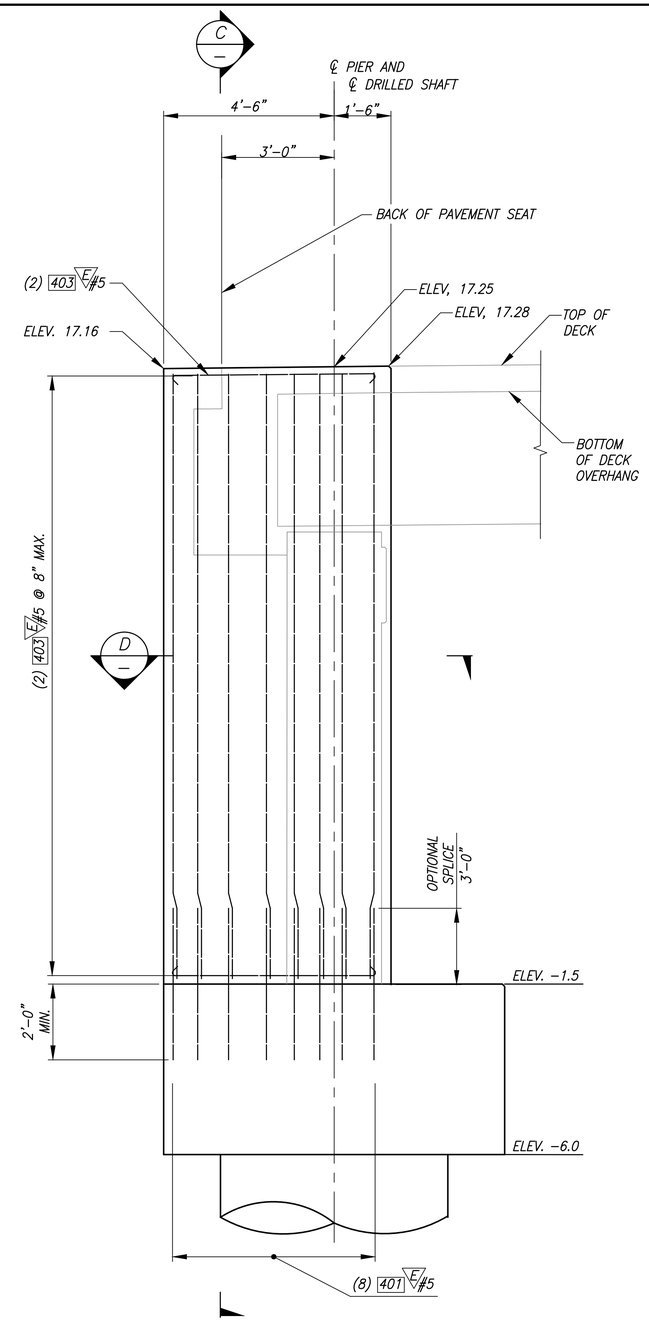

CURTAIN WALL ELEVATION / B / B04
SCALE: 1/2" = 1'-0"

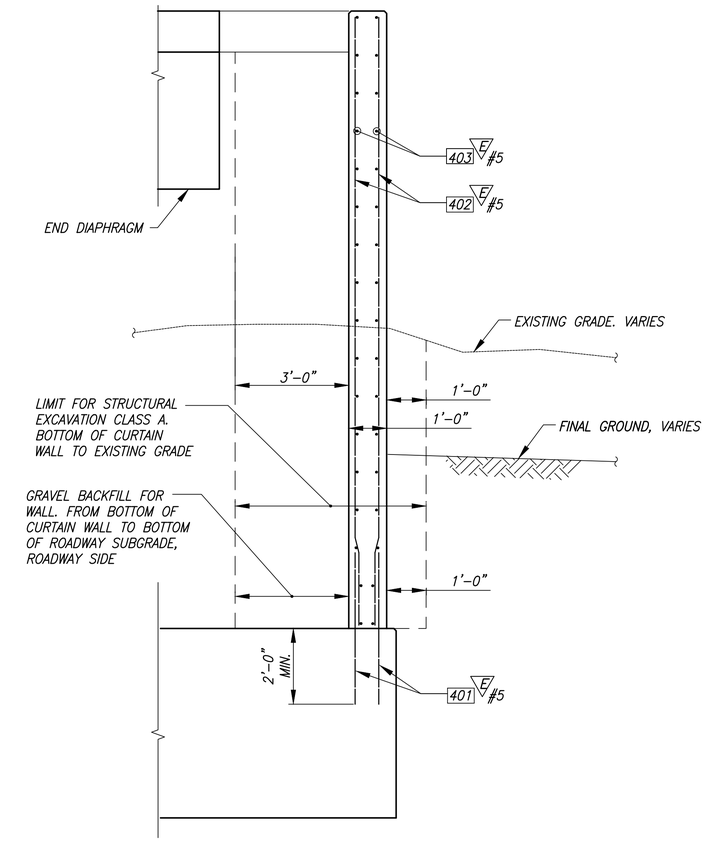

SECTION C / –
SCALE: 1/2" = 1'-0"

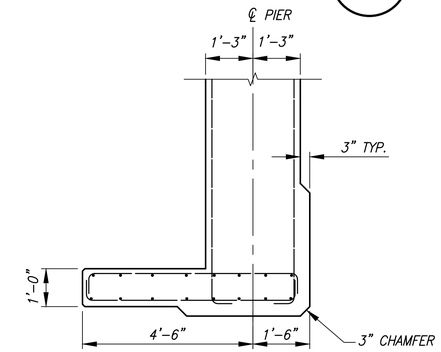

SECTION D / –
SCALE: 1/2" = 1'-0"

REVISIONS			
No.	BY	DATE	DESCRIPTION

SURVEYED: COUNTY
DESIGNED: MO
DRAWN: MO
CHECKED: RPD
CRP No. 2626
DATE: 08/28/24

Otak
11241 Willows Road NE, Suite 200
Redmond, WA 98052
425.822.4446
www.otak.com

ROBERT P. DOHERTY — STATE OF WASHINGTON — 43425 — REGISTERED PROFESSIONAL ENGINEER
8/29/2024

KITSAP COUNTY 18 57 WASHINGTON

KITSAP COUNTY
DEPT. OF PUBLIC WORKS
614 DIVISION STREET MS-26
PORT ORCHARD, WA 98366
TEL:(360) 337-5777 FAX:(360) 337-4867

HARPER ESTUARY BARRIER CORRECTION

PIERS 1 AND 2 DETAILS

KITSAP COUNTY, WASHINGTON
SECTION 2, TOWNSHIP 23 NORTH, RANGE 2 EAST, W.M.

SHEET B05
12 OF 55

Plotted: Aug 29, 2024 – 11:13am Matt.OConnell O:\PROJECT\32500\32510\Dwg\05_B05.dwg Layout Name: B05

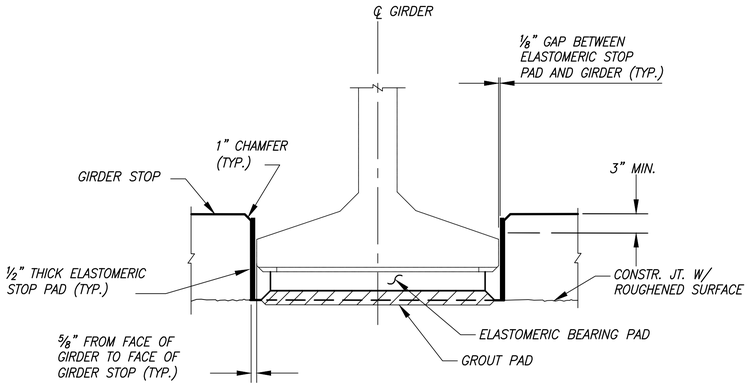

SECTION G

N.T.S.

NOTE:

1. GIRDER STOPS SHALL BE CONSTRUCTED AFTER PLACEMENT OF PRESTRESSED GIRDERS.
2. THE ELASTOMERIC STOP PADS SHALL BE CEMENTED TO GIRDER STOPS WITH APPROVED ADHESIVE.

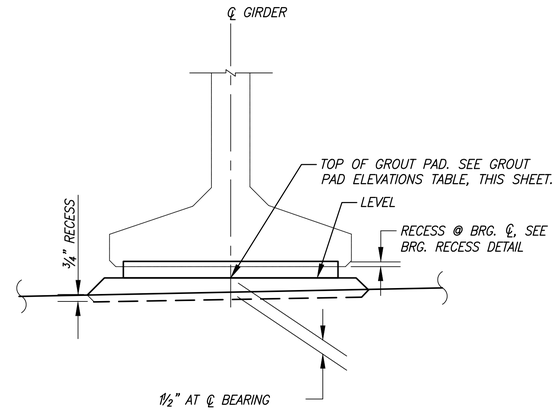

GROUT PAD DETAIL

N.T.S.

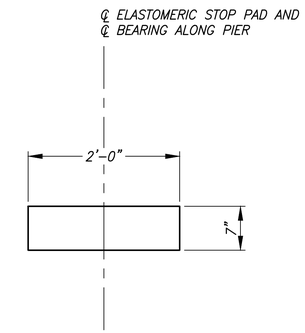

ELASTOMERIC STOP PAD

N.T.S.
DUROMETER HARDNESS = 50-60

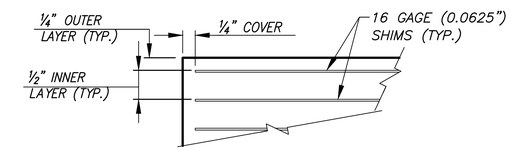

SECTION D

N.T.S.

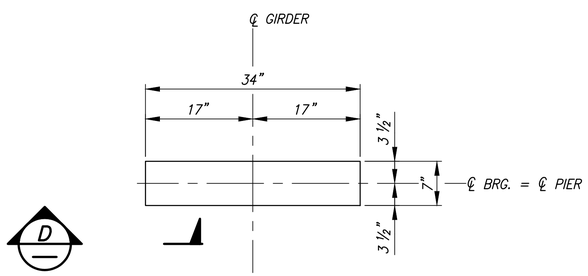

BEARING PAD

N.T.S.
LAMINATED ELASTOMERIC BEARING PAD 2.25" THICK (4-16GA SHIMS)

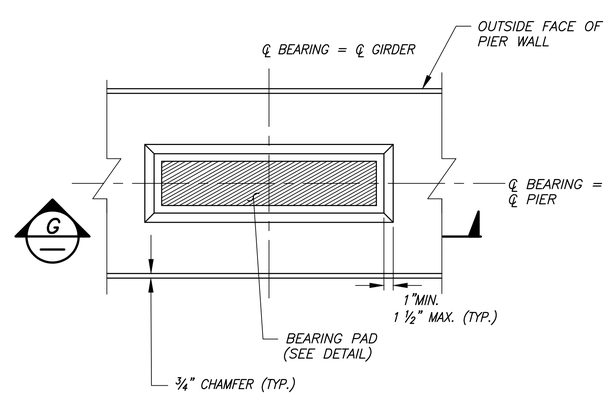

GROUT PAD PLAN

N.T.S.

BEARING DESIGN TABLE

SERVICE I LIMIT STATE

GIRDER	A,B,C,F,G	D	E
DEAD LOAD REACTION (KIPS)	113	110	116
LIVE LOAD REACTION (W/O IMPACT, KIPS)	31	31	31
LOADED HEIGHT (DL, INCHES)	2.22	2.22	2.22
UNLOADED HEIGHT (INCHES)	2.25	2.25	2.25
SHEAR MODULUS AT 73° F (PSI)	165	165	165

GROUT PAD ELEVATIONS

GIRDER	ELEVATION
A	13.06
B	13.16
C	13.25
D	13.35
E	13.25
F	13.16
G	13.06

REVISIONS			
No.	BY	DATE	DESCRIPTION

SURVEYED: COUNTY
DESIGNED: MO
DRAWN: MO
CHECKED: RPD
CRP No. 2626
DATE: 08/28/24

Otak
11241 Willows Road NE, Suite 200
Redmond, WA 98052
425.822.4446
www.otak.com

ROBERT P. DOHERTY, STATE OF WASHINGTON, 43425, REGISTERED PROFESSIONAL ENGINEER
8/29/2024

KITSAP COUNTY
DEPT. OF PUBLIC WORKS
614 DIVISION STREET MS-26
PORT ORCHARD, WA 98366
TEL:(360) 337-5777 FAX:(360) 337-4867

HARPER ESTUARY BARRIER CORRECTION

BEARING DETAILS

KITSAP COUNTY, WASHINGTON
SECTION 2, TOWNSHIP 23 NORTH, RANGE 2 EAST, W.M.

Plotted: Aug 29, 2024 - 11:13am Matt.OConnell O:\PROJECT\32500\32510\Dwg\05_B06.dwg Layout Name: B06

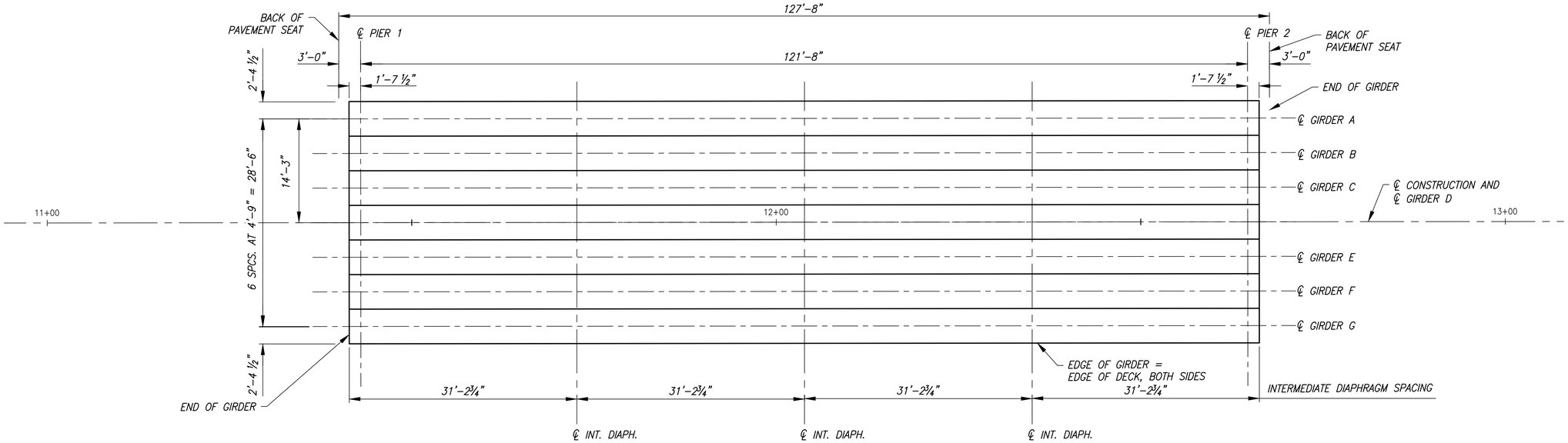

FRAMING PLAN

SCALE: 1" = 8'-0"

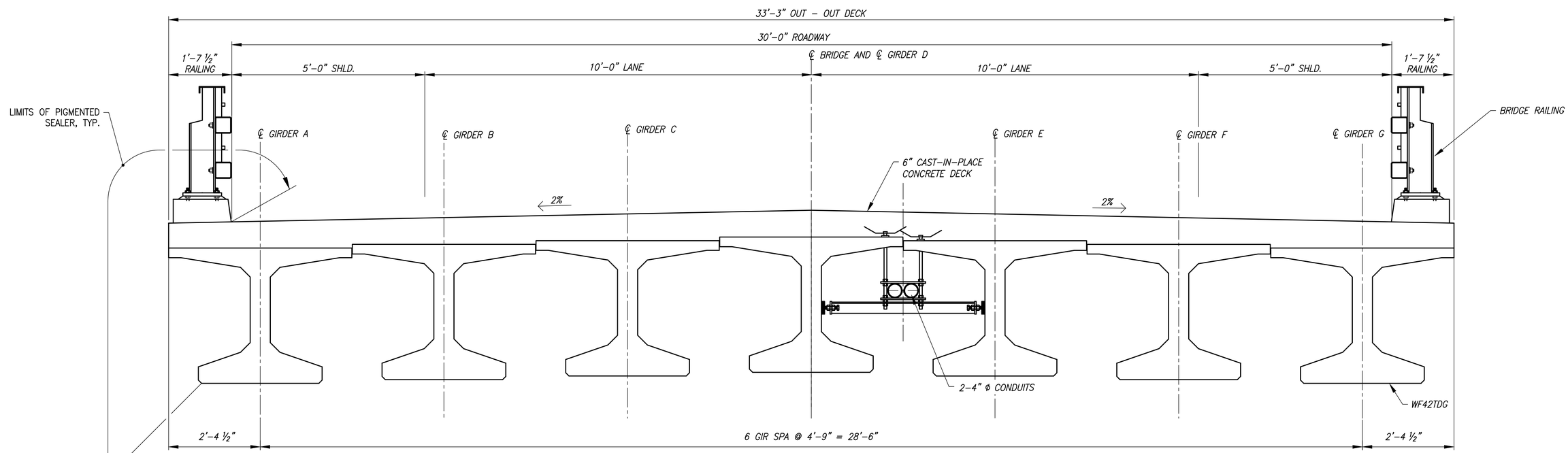

TYPICAL SECTION

SCALE: 3/4" = 1'-0"

REVISIONS			
No.	BY	DATE	DESCRIPTION

SURVEYED:	COUNTY
DESIGNED:	MO
DRAWN:	MO
CHECKED:	RPD
CRP No.	2626
DATE:	08/28/24

Otak
11241 Willows Road NE, Suite 200
Redmond, WA 98052
425.822.4446
www.otak.com

STATE OF WASHINGTON ROBERT P. DOHERTY 43425 REGISTERED PROFESSIONAL ENGINEER
8/29/2024

KITSAP COUNTY 18 57 WASHINGTON

KITSAP COUNTY
DEPT. OF PUBLIC WORKS
614 DIVISION STREET MS-26
PORT ORCHARD, WA 98366
TEL:(360) 337-5777 FAX:(360) 337-4867

HARPER ESTUARY BARRIER CORRECTION

FRAMING PLAN AND TYPICAL SECTION

KITSAP COUNTY, WASHINGTON
SECTION 2, TOWNSHIP 23 NORTH, RANGE 2 EAST, W.M.

SHEET B07
14 OF 55

Plotted: Aug 29, 2024 – 11:14am Matt.OConnell O:\PROJECT\32500\32510\Dwg\05_B07.dwg Layout Name: B07

GIRDER SCHEDULE

SPAN	GIRDER	GIRDER SERIES	TOP FLANGE WIDTH "W"	PLAN LENGTH (ALONG GIRDER GRADE) (SEE GIRDER NOTE 1)	INT. DIAPHRAGM TYPE (FULL OR PARTIAL)	GIRDER END DETAILS							MIN. CONC. COMP. STRENGTH		NUMBER OF STRANDS (SEE GIRDER NOTE 2)			LOCATION OF C.G. STRANDS			STRAIGHT STRANDS TO EXTEND				"A" DIMENSIONS AT ℄ BEARINGS	DECK SCREED CAMBER "C"	MIDSPAN VERTICAL DEFLECTION "D"		REINFORCEMENT DETAILS						SHIPPING AND HANDLING DETAILS				
																					END 1		END 2						ZONE 1		ZONE 2		ZONE 3						
						END 1 TYPE	END 2 TYPE	L_d	θ_1	θ_2	P_1	P_2	@ 28-DAYS F'CI (KSI)	@ RELEASE F'CI (KSI)	STRAIGHT	HARPED	TEMPORARY	E	$F_{℄}$	F_O	STRANDS	EXTENSION LENGTH	STRANDS	EXTENSION LENGTH			LOWER BOUND @ 40 DAYS	UPPER BOUND @ 120 DAYS	SPACINGS	LENGTH	SPACINGS	LENGTH	SPACINGS	LENGTH	L	L1	L2	K_θ MINIMUM SHIPPING SUPPORT ROTATIONAL SPRING CONSTANT	W_{CC} MINIMUM SHIPPING SUPPORT CNTR-TO-CNTR WHEEL SPACING
1	A-G	WF42TDG	4'-9"	124'-11"	FULL	A	A	N/A	90	90	1'-7 ½"	1'-7 ½"	9.0	7.5	32	12	0	3"	3 ¾"	11 ⅝"	1 TO 14	1'-6"	1 TO 14	1'-6"	8"	2 ½"	8 ⅛"	11 ⅜"	2 ½"	2'-0"	6"	12'-0"	9"	4'-6"	3'-0"	3'-6"	3'-6"	40000 KIP-IN/RAD	6'-0"

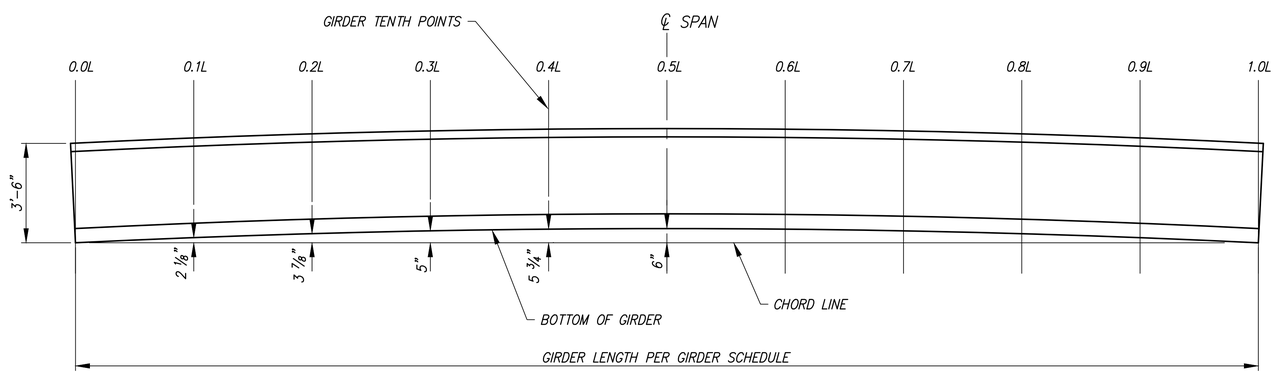

GIRDER PRECAMBER DIAGRAM

GIRDER NOTES

1. PLAN LENGTH SHALL BE INCREASED AS NECESSARY TO COMPENSATE FOR SHORTENING DUE TO PRESTRESS AND SHRINKAGE.
2. ALL PRETENSIONED AND TEMPORARY STRANDS SHALL BE 0.6"ø AASHTO M203 GRADE 270 LOW RELAXATION STRANDS, JACKED TO 202.5 KSI.
3. GIRDER SHALL BE FABRICATED WITH AN UPWARD CAMBER AS SHOWN IN THE GIRDER PRECAMBER DIAGRAM, THIS SHEET.
4. PRECAMBER DIMENSIONS SHOWN ARE MEASURED FROM THE CHORDED LINE BETWEEN GIRDER ENDS AT GIRDER TENTH POINTS AND SHALL BE MIRRORED ABOUT ℄ SPAN. GIRDER SHALL HAVE RADIAL ARC BETWEEN POINTS SHOWN.
5. ALL STRAND LOCATIONS SHALL BE MEASURED FROM THE BOTTOM OF THE GIRDER. STRAND VERTICAL ALIGNMENT SHALL BE PARALLEL TO BOTTOM FLANGE.
6. CAMBER DIMENSIONS SHOWN ARE PRIOR TO STRAND RELEASE.
7. REFER TO SHEET B14 FOR SCREED SETTING DIMENSIONS.
8. SEE DECK REINFORCING PLAN AND SECTION AND UTILITY ATTACHMENT DETAILS SHEETS FOR BLOCKOUTS FOR UTILITY SUPPORTS.

REVISIONS			
No.	BY	DATE	DESCRIPTION

SURVEYED: COUNTY
DESIGNED: MO
DRAWN: MO
CHECKED: RPD
CRP No. 2626
DATE: 08/28/24

Otak
11241 Willows Road NE, Suite 200
Redmond, WA 98052
425.822.4446
www.otak.com

ROBERT P. DOHERTY — STATE OF WASHINGTON — 43425 — REGISTERED PROFESSIONAL ENGINEER
8/29/2024

KITSAP COUNTY 18 57 WASHINGTON
KITSAP COUNTY
DEPT. OF PUBLIC WORKS
614 DIVISION STREET MS-26
PORT ORCHARD, WA 98366
TEL:(360) 337-5777 FAX:(360) 337-4867

HARPER ESTUARY BARRIER CORRECTION

WF THIN DECK GIRDER
DETAIL 1 OF 4

KITSAP COUNTY, WASHINGTON
SECTION 2, TOWNSHIP 23 NORTH, RANGE 2 EAST, W.M.

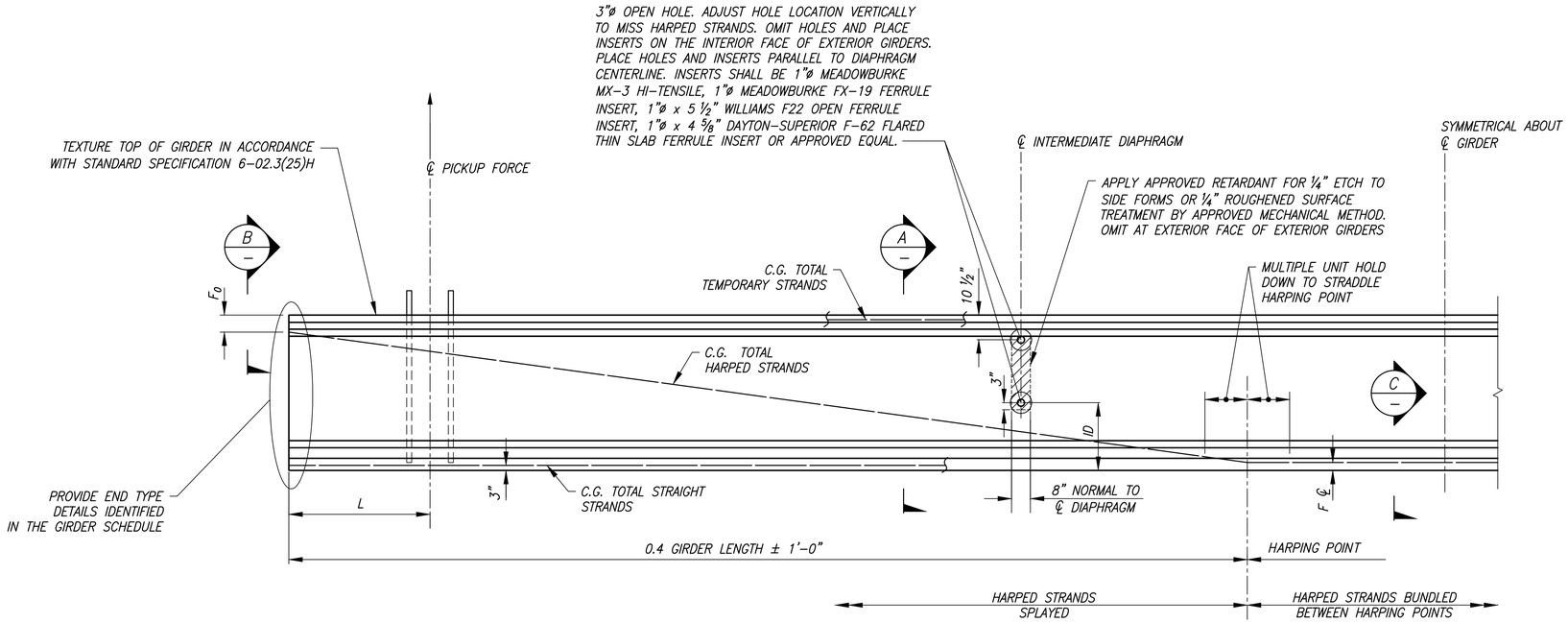

GIRDER ELEVATION

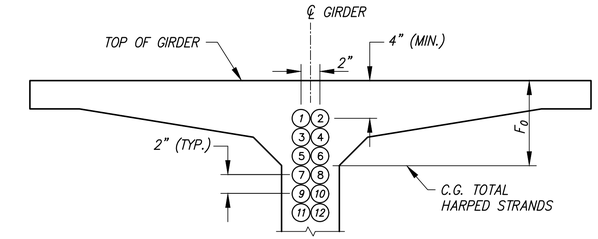

VIEW B

HARPED STRAND LOCATION SEQUENCE SHALL BE AS SHOWN 1, 2 ETC.

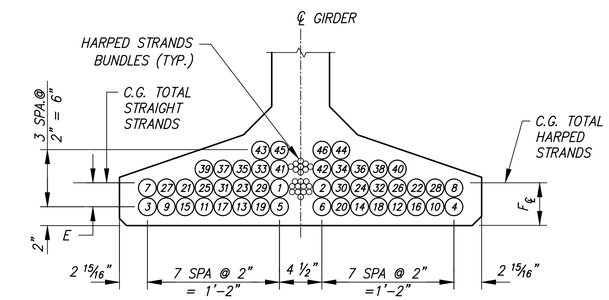

VIEW C

STRAIGHT STRAND LOCATION SEQUENCE SHALL BE AS SHOWN 1, 2 ETC.

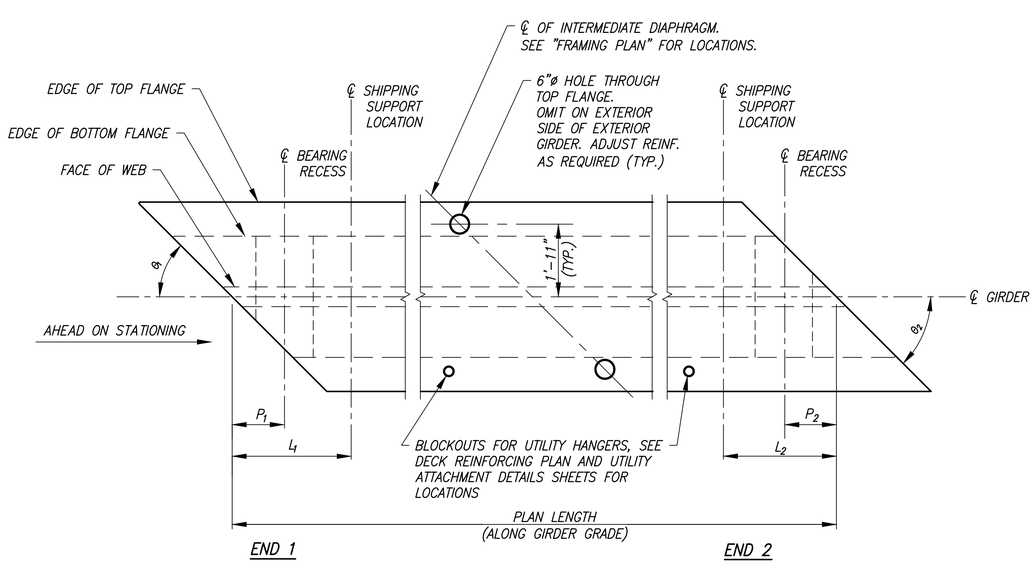

GIRDER PLAN

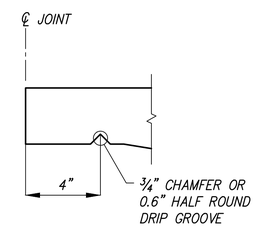

DETAIL 1

EXTERIOR EDGE OF EXTERIOR GIRDER

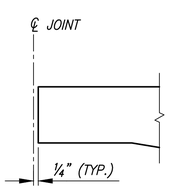

DETAIL 1

ALL OTHER LOCATIONS

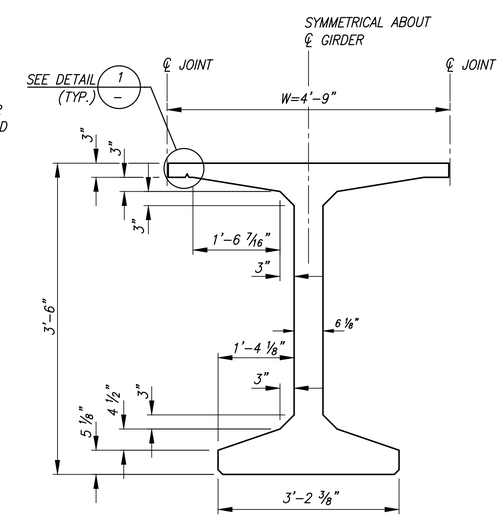

SECTION WF42TDG A

REINFORCEMENT AND STRANDS NOT SHOWN

REVISIONS			
No.	BY	DATE	DESCRIPTION

SURVEYED: COUNTY
DESIGNED: MO
DRAWN: MO
CHECKED: RPD
CRP No. 2626
DATE: 08/28/24

Otak
11241 Willows Road NE, Suite 200
Redmond, WA 98052
425.822.4446
www.otak.com

ROBERT P. DOHERTY — STATE OF WASHINGTON — 43425 — REGISTERED PROFESSIONAL ENGINEER
8/29/2024

KITSAP COUNTY — 18 57 — WASHINGTON

KITSAP COUNTY
DEPT. OF PUBLIC WORKS
614 DIVISION STREET MS-26
PORT ORCHARD, WA 98366
TEL:(360) 337-5777 FAX:(360) 337-4867

HARPER ESTUARY BARRIER CORRECTION

WF THIN DECK GIRDER
DETAIL 2 OF 4

KITSAP COUNTY, WASHINGTON
SECTION 2, TOWNSHIP 23 NORTH, RANGE 2 EAST, W.M.

SHEET B09
16 OF 55

Plotted: Aug 29, 2024 – 11:15am Matt.OConnell O:\PROJECT\32500\32510\Dwg\05_B09.dwg Layout Name: B09

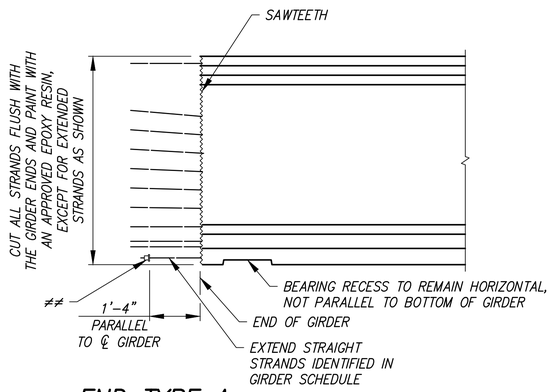

END TYPE A

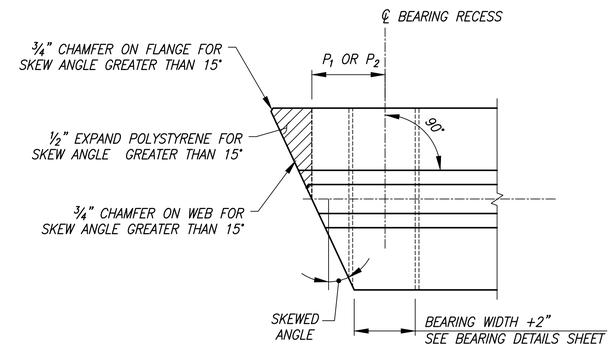

PLAN

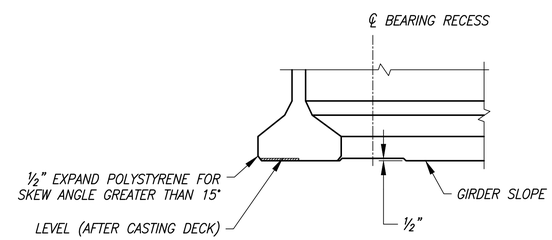

ELEVATION

BEARING RECESS AND BOTTOM FLANGE SPALL PROTECTION DETAIL

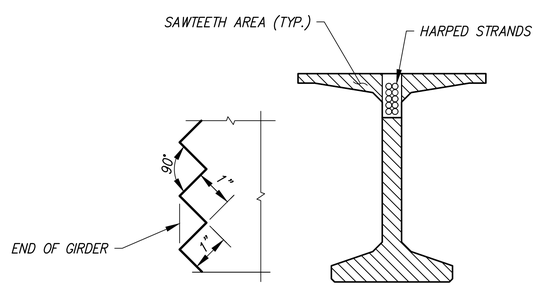

SAWTEETH DETAIL

SAWTEETH SHALL BE FULL WIDTH OVER AREA SHOWN

≠≠ 1 11/16"ø MIN. STRAND CHUCK OR ASTM A108 2 3/4"ø x 1 1/8" STRAND ANCHOR. ANCHOR STRAND WITH WEDGES BEFORE ERECTION. VERIFY WEDGES ARE SEATED TIGHTLY IMMEDIATELY BEFORE PLACING DIAPHRAGM CONCRETE.

REVISIONS			
No.	BY	DATE	DESCRIPTION

SURVEYED: COUNTY
DESIGNED: MO
DRAWN: MO
CHECKED: RPD
CRP No. 2626
DATE: 08/28/24

Otak
11241 Willows Road NE, Suite 200
Redmond, WA 98052
425.822.4446
www.otak.com

ROBERT P. DOHERTY — STATE OF WASHINGTON — 43425 — REGISTERED PROFESSIONAL ENGINEER
8/29/2024

KITSAP COUNTY
DEPT. OF PUBLIC WORKS
614 DIVISION STREET MS-26
PORT ORCHARD, WA 98366
TEL:(360) 337-5777 FAX:(360) 337-4867

HARPER ESTUARY BARRIER CORRECTION

WF THIN DECK GIRDER
DETAIL 3 OF 4

KITSAP COUNTY, WASHINGTON
SECTION 2, TOWNSHIP 23 NORTH, RANGE 2 EAST, W.M.

Plotted: Aug 29, 2024 – 11:15am Matt.OConnell O:\PROJECT\32500\32510\Dwg\05_B10.dwg Layout Name: B10

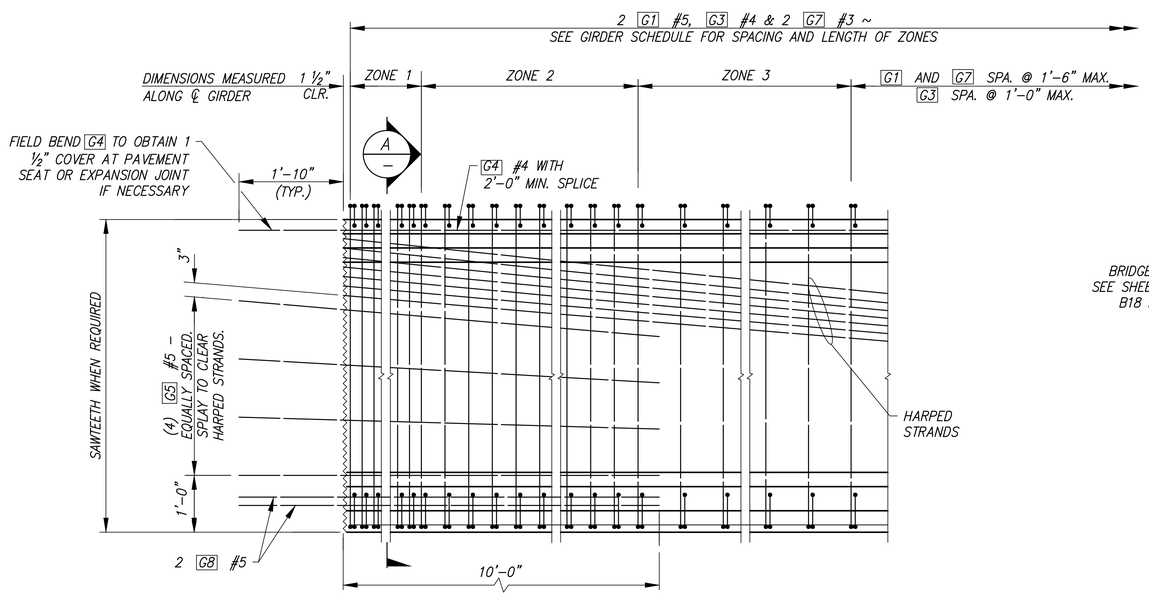

REINFORCEMENT END ELEVATION

STAIGHT AND TEMPORARY STRANDS NOT SHOWN FOR CLARITY.
WF66TDG SHOWN, OTHERS SIMILAR

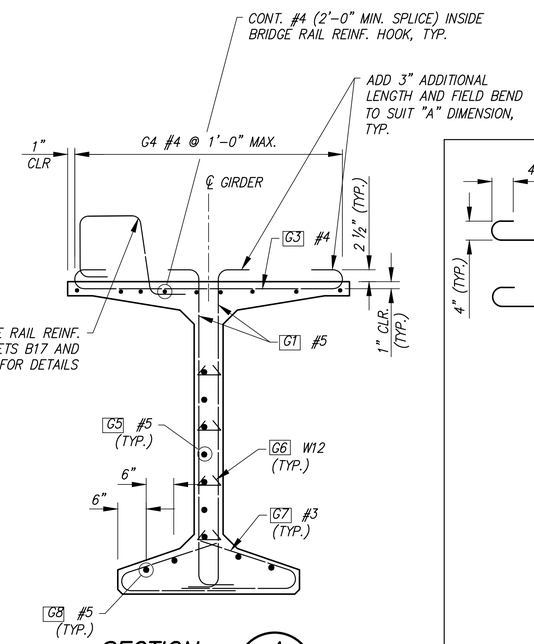

SECTION A

STRANDS NOT SHOWN

NOTE:
1. DEFORMED WELDED WIRE REINFORCEMENT IN ACCORDANCE WITH WSDOT STANDARD SPECIFICATION 6-02.3(25)A.

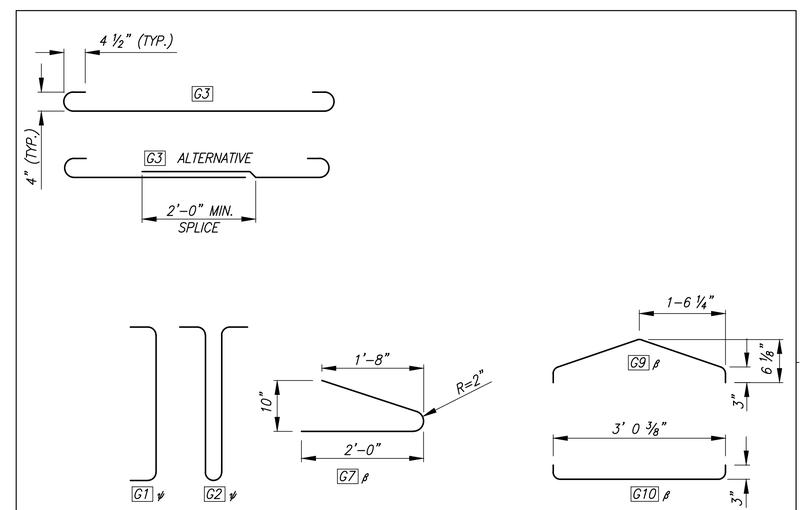

ß - PAIRS OF G7 BARS, OR G9 AND G10 BARS, MAY BE USED INTERCHANGEABLY AS BOTTOM FLANGE TIES.
ψ - 1 G2 MAY BE SUBSTITUTED FOR 2 G1 WITHIN ZONE 1.

BENDING DIAGRAM

(ALL DIMENSIONS ARE OUT TO OUT)

REVISIONS			
No.	BY	DATE	DESCRIPTION

SURVEYED: COUNTY
DESIGNED: MO
DRAWN: MO
CHECKED: RPD
CRP No. 2626
DATE: 08/28/24

Otak
11241 Willows Road NE, Suite 200
Redmond, WA 98052
425.822.4446
www.otak.com

ROBERT P. DOHERTY, STATE OF WASHINGTON, 43425, REGISTERED PROFESSIONAL ENGINEER
8/29/2024

KITSAP COUNTY 18 57 WASHINGTON

KITSAP COUNTY
DEPT. OF PUBLIC WORKS
614 DIVISION STREET MS-26
PORT ORCHARD, WA 98366
TEL:(360) 337-5777 FAX:(360) 337-4867

HARPER ESTUARY BARRIER CORRECTION

WF THIN DECK GIRDER
DETAIL 4 OF 4

KITSAP COUNTY, WASHINGTON
SECTION 2, TOWNSHIP 23 NORTH, RANGE 2 EAST, W.M.

SHEET B11
18 OF 55

Plotted: Aug 29, 2024 - 12:27pm Matt.OConnell O:\PROJECT\32500\32510\Dwg\05_B11.dwg Layout Name: B11

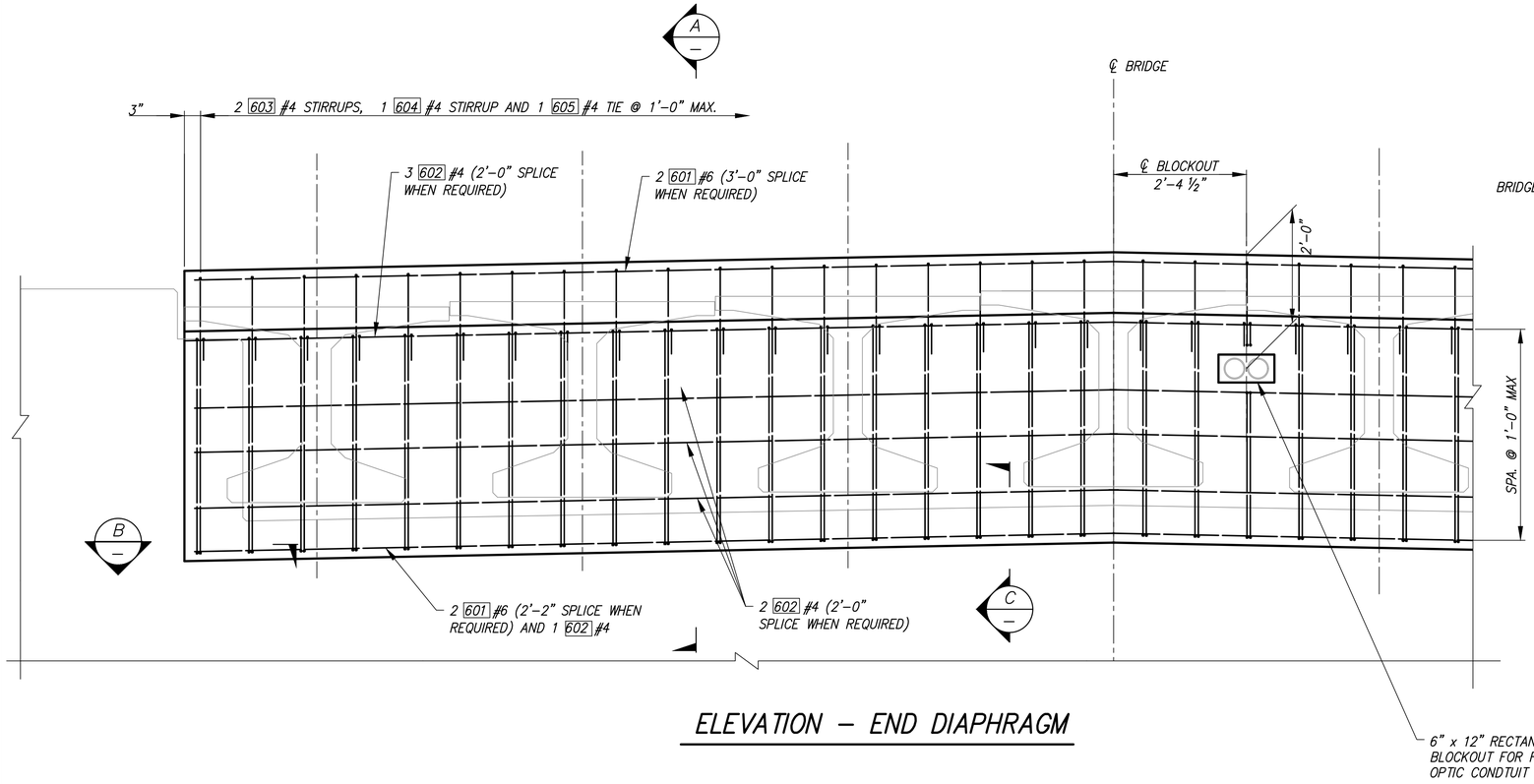

ELEVATION – END DIAPHRAGM

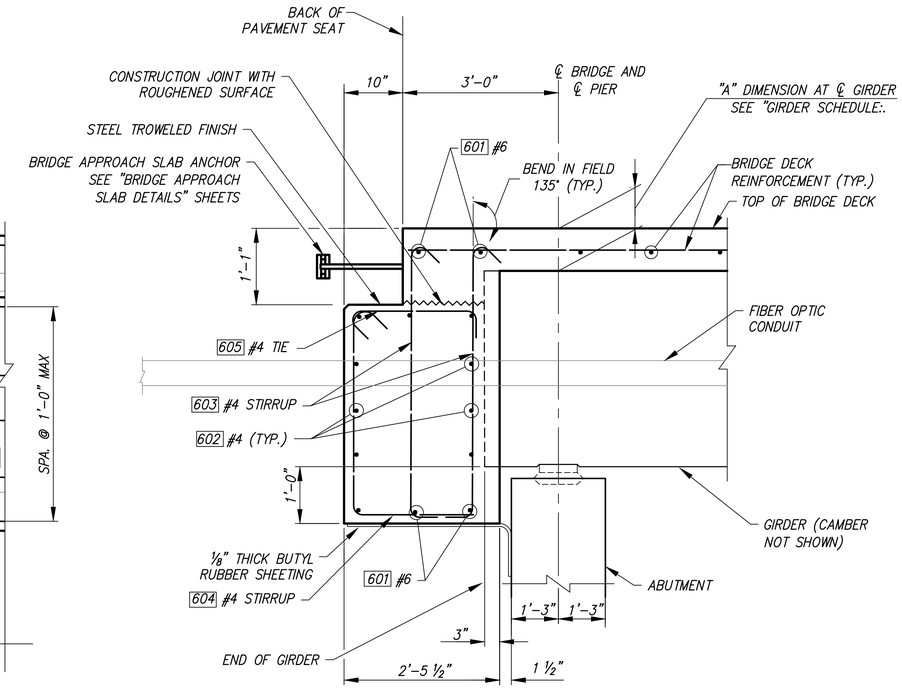

SECTION A

DIMENSIONS ARE NORMAL TO ℄ PIER

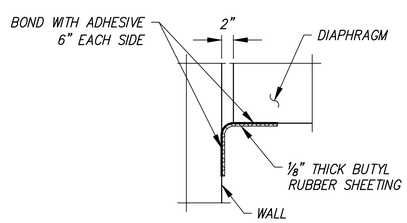

SECTION B

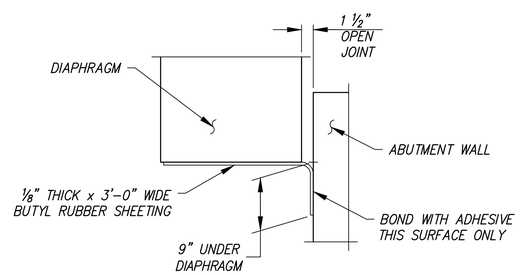

SECTION C

NOTES:

1. GIRDERS SHALL BE HELD RIGIDLY IN PLACE WHEN DIAPHRAGMS ARE PLACED.

2. EXTENDED STRANDS AND GIRDER REINFORCING NOT SHOWN FOR CLARITY.

3. WITHIN BLOCKOUTS, WRAP EACH CONDUIT WITH ⅛" BUTYL RUBBER SHEET AND THEN FILL VOID SPACE WITH NON-SHRINK GROUT.

REVISIONS			
No.	BY	DATE	DESCRIPTION

SURVEYED: COUNTY
DESIGNED: MO
DRAWN: MO
CHECKED: RPD
CRP No. 2626
DATE: 08/28/24

Otak
11241 Willows Road NE, Suite 200
Redmond, WA 98052
425.822.4446
www.otak.com

ROBERT P. DOHERTY, STATE OF WASHINGTON, 43425, REGISTERED PROFESSIONAL ENGINEER
8/29/2024

KITSAP COUNTY
DEPT. OF PUBLIC WORKS
614 DIVISION STREET MS-26
PORT ORCHARD, WA 98366
TEL:(360) 337-5777 FAX:(360) 337-4867

HARPER ESTUARY BARRIER CORRECTION

END DIAPHRAGM DETAILS

KITSAP COUNTY, WASHINGTON
SECTION 2, TOWNSHIP 23 NORTH, RANGE 2 EAST, W.M.

Plotted: Aug 29, 2024 – 11:15am Matt.OConnell O:\PROJECT\32500\32510\Dwg\05_B12.dwg Layout Name: B12

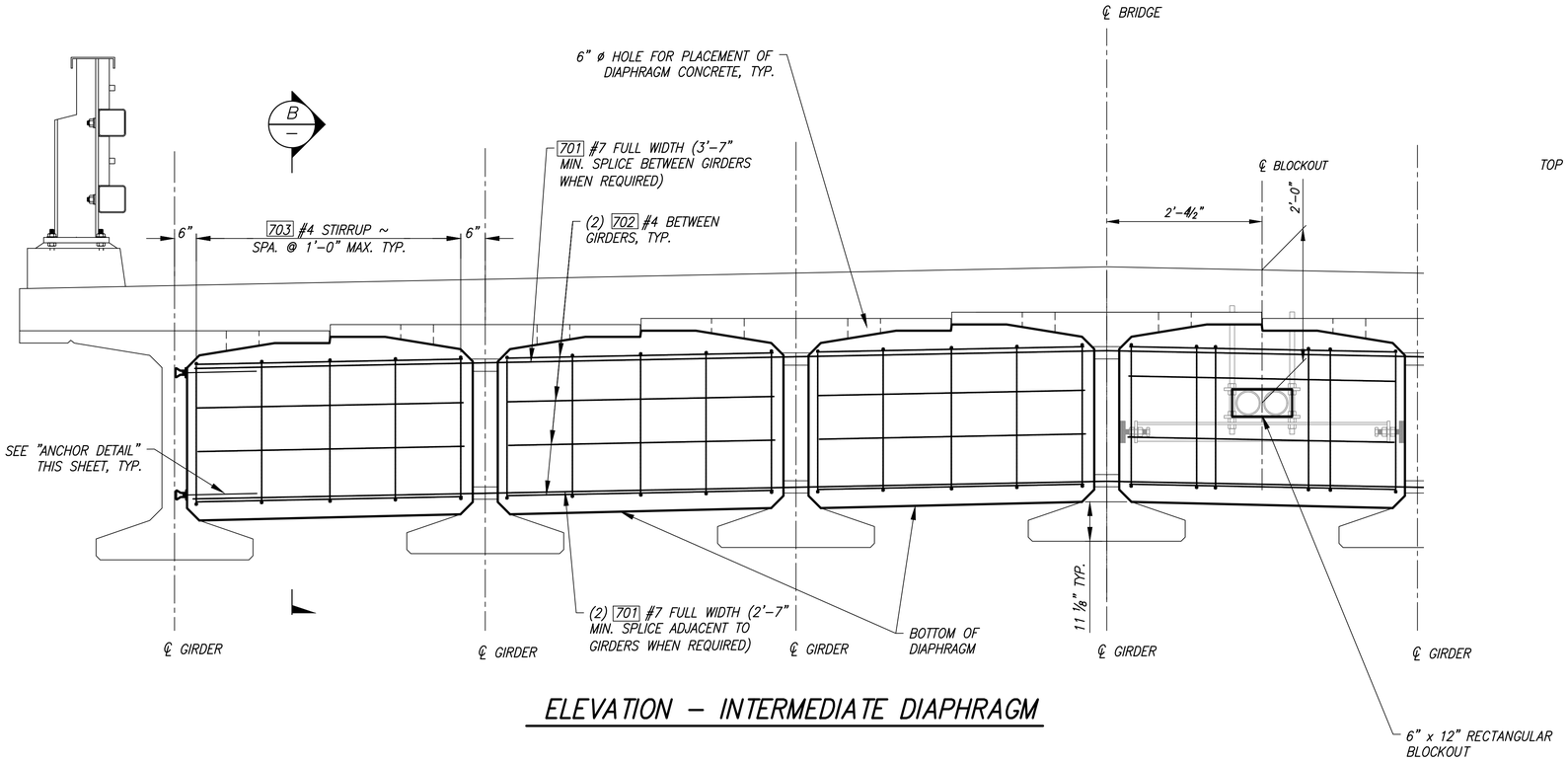

ELEVATION – INTERMEDIATE DIAPHRAGM

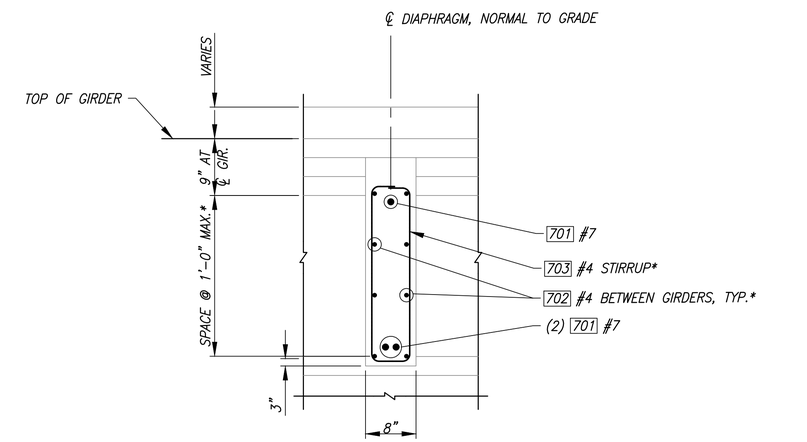

* ADJUST BAR SPACING TO PROVIDE 2" CLR. TO EDGE OF BLOCKOUT

SECTION B

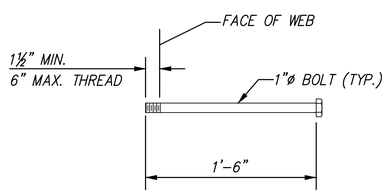

ANCHOR DETAIL

ASTM A-307

NOTES:

1. GIRDERS SHALL BE HELD RIGIDLY IN PLACE WHEN DIAPHRAGMS ARE PLACED.

2. IT MAY BE NECESSARY TO THREAD REINFORCING BARS THROUGH HOLES IN GIRDERS PRIOR TO PLACING EXTERIOR GIRDERS.

3. WITHIN BLOCKOUTS, WRAP EACH CONDUIT WITH ⅛" BUTYL RUBBER SHEET AND THEN FILL VOID SPACE WITH NON-SHRINK GROUT.

REVISIONS			
No.	BY	DATE	DESCRIPTION

SURVEYED: COUNTY
DESIGNED: MO
DRAWN: MO
CHECKED: RPD
CRP No. 2626
DATE: 08/28/24

Otak
11241 Willows Road NE, Suite 200
Redmond, WA 98052
425.822.4446
www.otak.com

ROBERT P. DOHERTY, STATE OF WASHINGTON, 43425, REGISTERED PROFESSIONAL ENGINEER
8/29/2024

KITSAP COUNTY 18 57 WASHINGTON

KITSAP COUNTY
DEPT. OF PUBLIC WORKS
614 DIVISION STREET MS-26
PORT ORCHARD, WA 98366
TEL:(360) 337-5777 FAX:(360) 337-4867

HARPER ESTUARY BARRIER CORRECTION

INTERMEDIATE DIAPHRAGM DETAILS

KITSAP COUNTY, WASHINGTON
SECTION 2, TOWNSHIP 23 NORTH, RANGE 2 EAST, W.M.

SHEET B13
20 OF 55

Plotted: Aug 29, 2024 – 11:15am Matt.OConnell O:\PROJECT\32500\32510\Dwg\05_B13.dwg Layout Name: B13

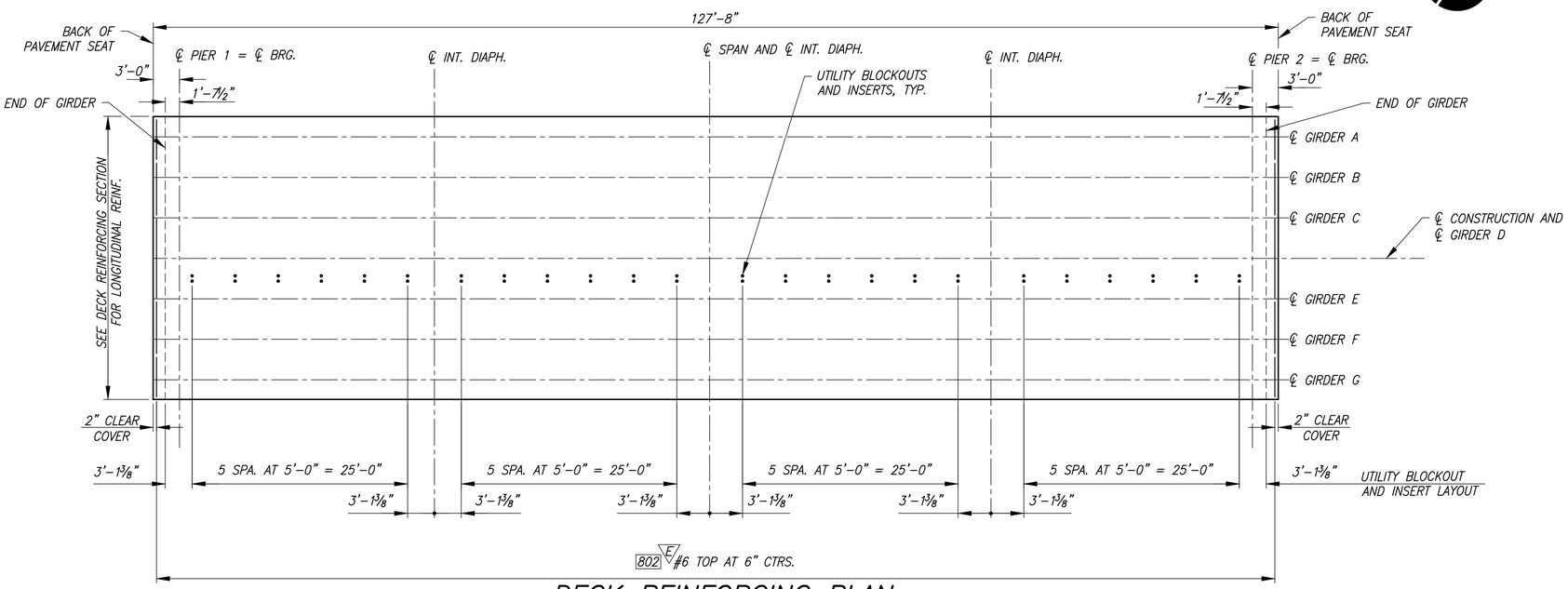

DECK REINFORCING PLAN

SCALE: ⅛" = 1'-0"

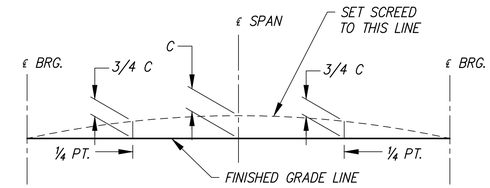

SCREED SETTING DIMENSIONS

FOR DIMENSION "C" SEE GIRDER SCHEDULE

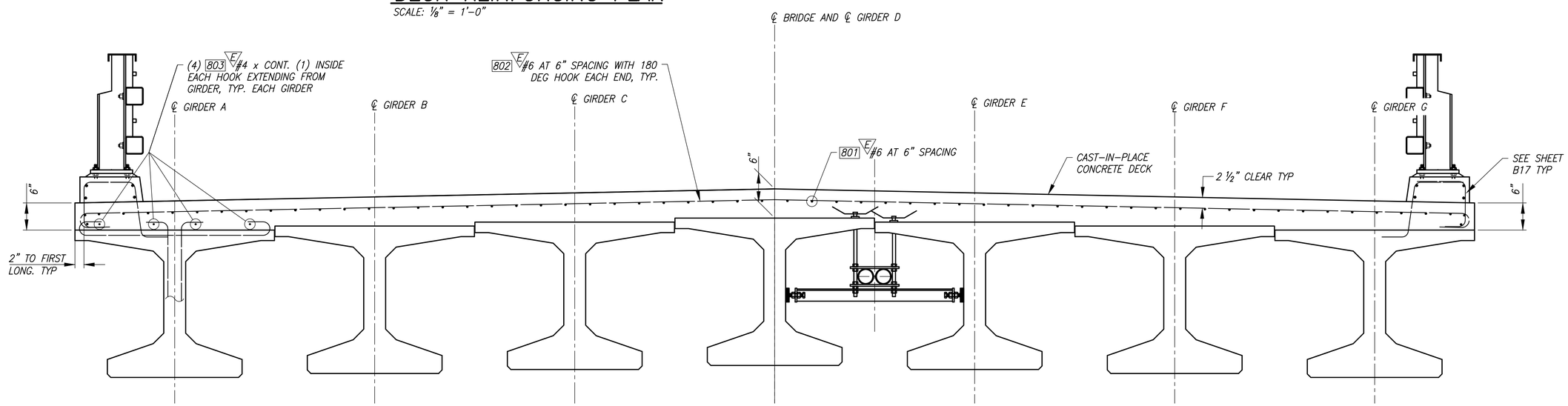

DECK REINFORCING SECTION

SCALE: ¾" = 1'-0"

REVISIONS			
No.	BY	DATE	DESCRIPTION

SURVEYED: COUNTY
DESIGNED: MO
DRAWN: MO
CHECKED: RPD
CRP No. 2626
DATE: 08/28/24

Otak
11241 Willows Road NE, Suite 200
Redmond, WA 98052
425.822.4446
www.otak.com

ROBERT P. DOHERTY — STATE OF WASHINGTON — 43429 — PROFESSIONAL ENGINEER
8/29/2024

KITSAP COUNTY 18 57 WASHINGTON

KITSAP COUNTY
DEPT. OF PUBLIC WORKS
614 DIVISION STREET MS-26
PORT ORCHARD, WA 98366
TEL:(360) 337-5777 FAX:(360) 337-4867

HARPER ESTUARY BARRIER CORRECTION

DECK REINFORCING PLAN AND SECTION

KITSAP COUNTY, WASHINGTON
SECTION 2, TOWNSHIP 23 NORTH, RANGE 2 EAST, W.M.

SHEET B14
21 OF 55

Plotted: Aug 29, 2024 – 12:24pm Matt.OConnell O:\PROJECT\32500\32510\Dwg\05_B14.dwg Layout Name: B14

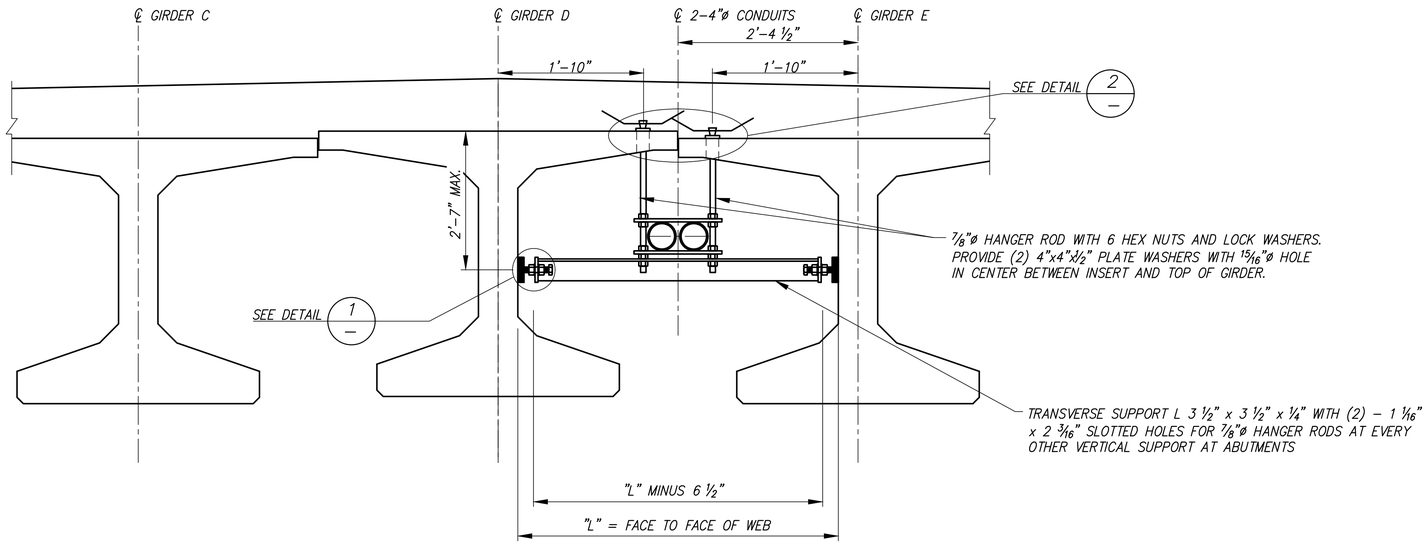

UTILITY SUPPORT

NOTES:

1. ALL MATERIALS SHALL BE GALVANIZED AFTER FABRICATION PER AASHTO M 111 OR AASHTO M 232 EXCEPT PIPE ROLLERS.
2. PAINT ROLLERS WITH THREE COATS OF GALVANIZING REPAIR PAINT. SEE STD. SPEC. SECTION 9-08.1(2)B.

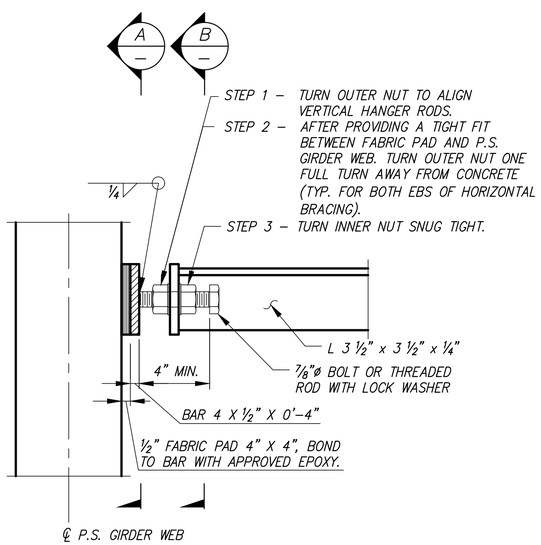

DETAIL 1

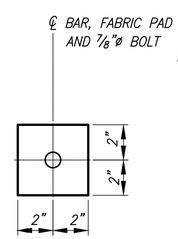

SECTION A

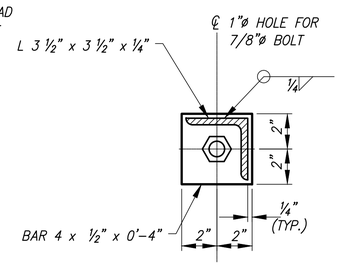

SECTION B

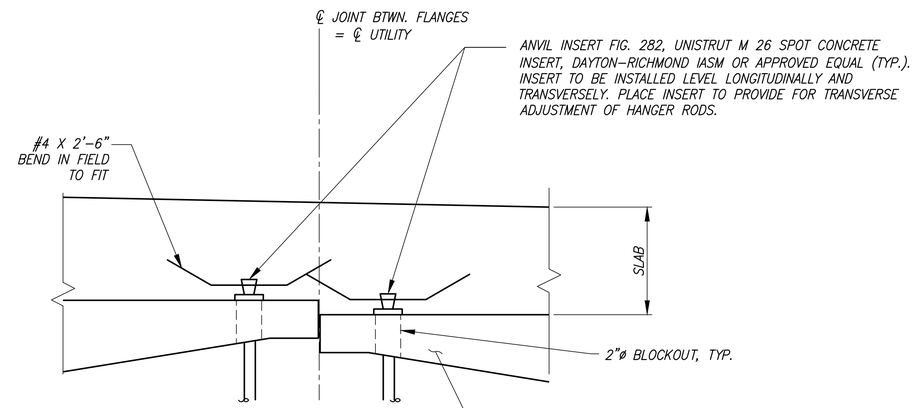

DETAIL 2

REVISIONS			
No.	BY	DATE	DESCRIPTION

SURVEYED: COUNTY
DESIGNED: MO
DRAWN: MO
CHECKED: RPD
CRP No. 2626
DATE: 08/28/24

Otak
11241 Willows Road NE, Suite 200
Redmond, WA 98052
425.822.4446
www.otak.com

ROBERT P. DOHERTY — STATE OF WASHINGTON — 43425 — REGISTERED PROFESSIONAL ENGINEER
8/29/2024

KITSAP COUNTY 18 57 WASHINGTON

KITSAP COUNTY
DEPT. OF PUBLIC WORKS
614 DIVISION STREET MS-26
PORT ORCHARD, WA 98366
TEL:(360) 337-5777 FAX:(360) 337-4867

HARPER ESTUARY BARRIER CORRECTION

UTILITY ATTACHMENT DETAILS

KITSAP COUNTY, WASHINGTON
SECTION 2, TOWNSHIP 23 NORTH, RANGE 2 EAST, W.M.

SHEET B15
22 OF 55

Plotted: Aug 29, 2024 – 11:34am Matt.OConnell O:\PROJECT\32500\32510\Dwg\05_B15.dwg Layout Name: B15

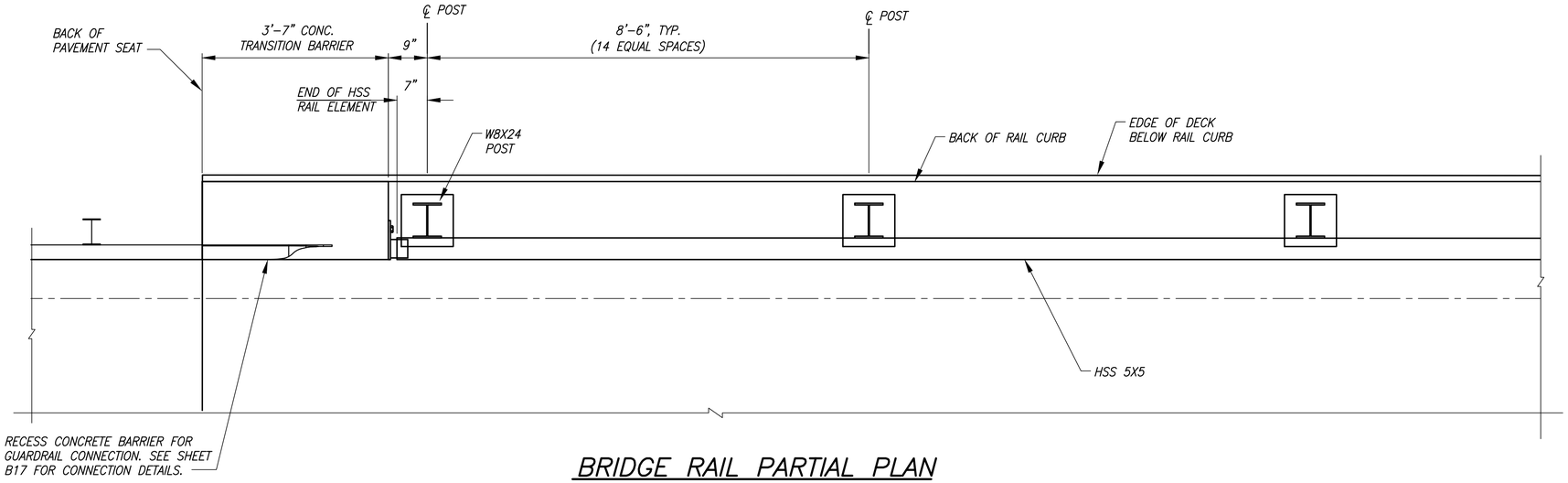

BRIDGE RAIL PARTIAL PLAN

BRIDGE RAIL NOTES:

1. RAIL ELEMENTS FOR THE HSS SHALL CONFORM TO ASTM SPECIFICATION A500 GRADE B, A618 OR A501.
2. STEEL SHAPES, PLATES, AND BARS SHALL CONFORM TO ASTM SPECIFICATION A36 UNLESS NOTED OTHERWISE.
3. HIGH STRENGTH ANCHOR BOLTS SHALL CONFORM TO ASTM SPECIFICATION F1554 GRADE 105.
4. REINFORCING STEEL SHALL CONFORM TO ASTM A706 OR AASHTO M31 (ASTM A615) GRADE 60.
5. PROVIDE CONCRETE CLASS 4000.
6. FABRICATE RAILING TO THE HORIZONTAL AND VERTICAL ALIGNMENT OF THE STRUCTURE. POSTS SHALL BE INSTALLED PLUMB.
7. HOT-DIP GALVANIZE ALL STRUCTURAL PLATES, SHAPES AND BARS PER ASTM A123 FASTENERS PER ASTM A153. HOT-DIP GALVANIZE ALL COMPONENTS AFTER FABRICATION, EXCEPT AS NOTED.
8. APPLY PIGMENTED SEALER TO EXPOSED FACES OF CONCRETE CURB AND TRANSITION BARRIER.
9. CONTRACTOR SHALL SUBMIT RAIL FABRICATION AND ERECTION DETAILS TO ENGINEER FOR REVIEW.

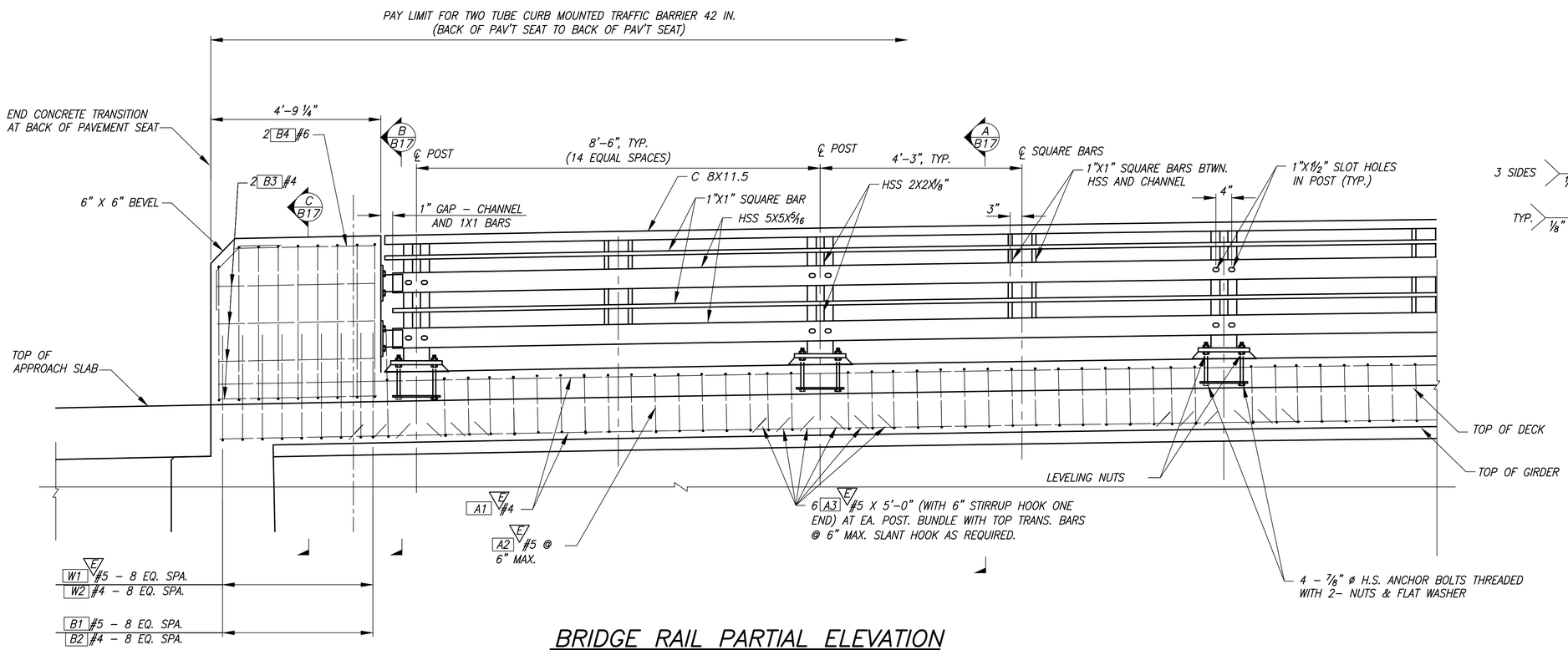

BRIDGE RAIL PARTIAL ELEVATION

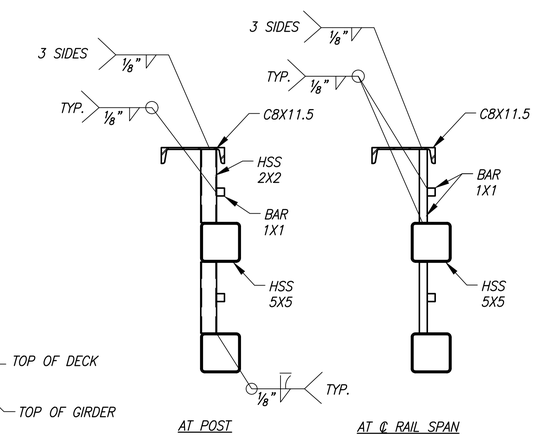

RAIL WELDING

NOTES:
1. GRIND WELDS FLUSH WHERE IN CONTACT WITH W POST.
2. SEE SHEET B18 FOR ADDITIONAL WELDING DETAILS.

REVISIONS			
No.	BY	DATE	DESCRIPTION

SURVEYED: COUNTY
DESIGNED: MO
DRAWN: MO
CHECKED: RPD
CRP No. 2626
DATE: 08/28/24

Otak
11241 Willows Road NE, Suite 200
Redmond, WA 98052
425.822.4446
www.otak.com

STATE OF WASHINGTON ROBERT P. DOHERTY 43425 REGISTERED PROFESSIONAL ENGINEER
8/29/2024

KITSAP COUNTY 18 57 WASHINGTON

KITSAP COUNTY
DEPT. OF PUBLIC WORKS
614 DIVISION STREET MS-26
PORT ORCHARD, WA 98366
TEL:(360) 337-5777 FAX:(360) 337-4867

HARPER ESTUARY BARRIER CORRECTION
BRIDGE RAIL DETAILS (1 OF 2)

KITSAP COUNTY, WASHINGTON
SECTION 2, TOWNSHIP 23 NORTH, RANGE 2 EAST, W.M.

SHEET B16
23 OF 55

Plotted: Aug 29, 2024 – 11:17am Matt.OConnell O:\PROJECT\32500\32510\Dwg\05_B16.dwg Layout Name: B16

XREF LIST
Ltscale: 1
Resolved
TTLBLK
DLS WASH STRUCT
IbmSEAL

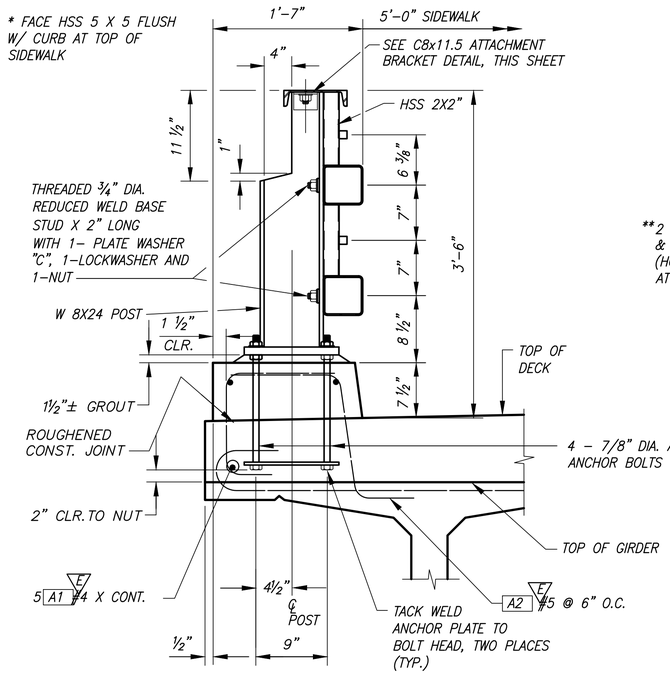

TYPICAL SECTION A B16

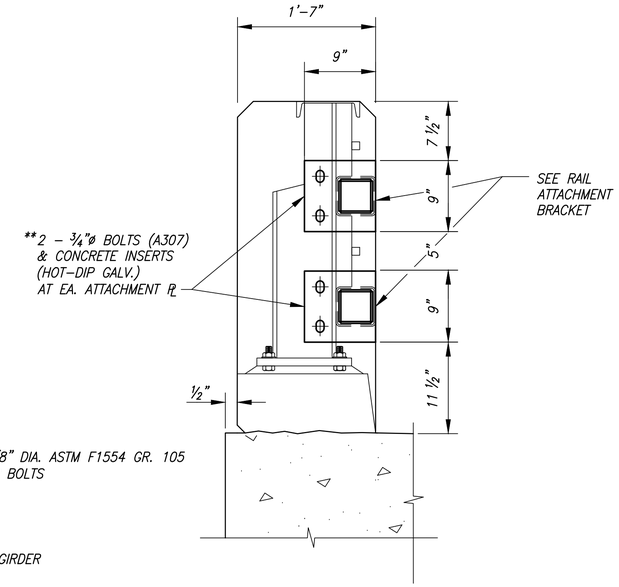

TYPICAL SECTION B B16

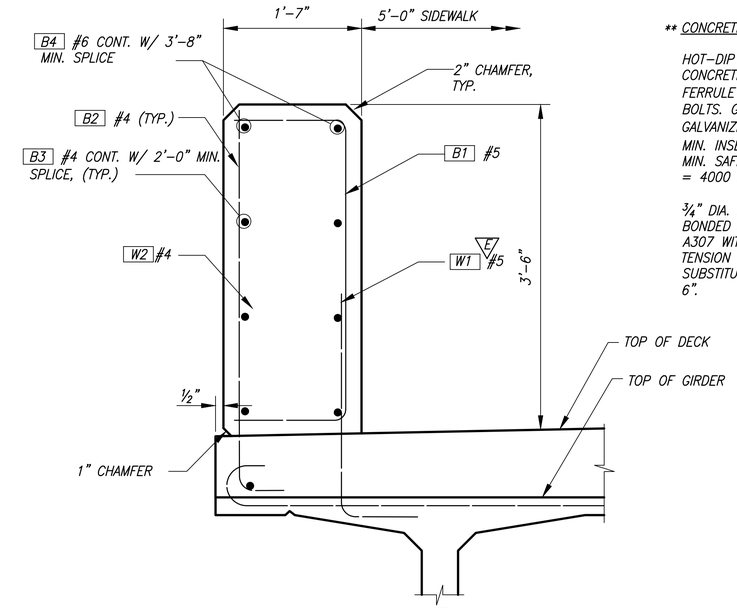

TYPICAL SECTION C B16

** CONCRETE INSERTS

HOT-DIP GALVANIZED EXPANDED COIL CONCRETE INSERTS WITH CLOSED-BACK FERRULE THREADED TO RECEIVE 3/4"ø BOLTS. GR.36 (ASTM A307, HOT DIP GALVANIZED)
MIN. INSERT LENGTH = 4 1/2"
MIN. SAFE WORKING LOAD IN TENSION = 4000 LBS

3/4" DIA. FULLY THREADED RESIN BONDED ANCHORS CONFORMING TO A307 WITH A SAFE WORKING LOAD IN TENSION OF 4000 LBS. MAY BE SUBSTITUTED. MIN. EMBED. SHALL BE 6".

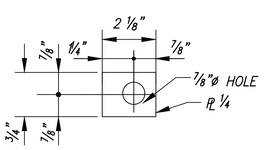

PLATE WASHER-"C"

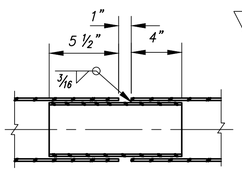

HSS 5X5 SPLICE

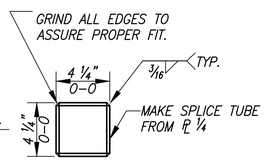

RAIL SPLICE DETAILS

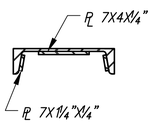

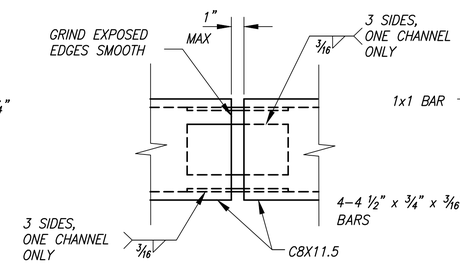

C8X11.5 SPLICE

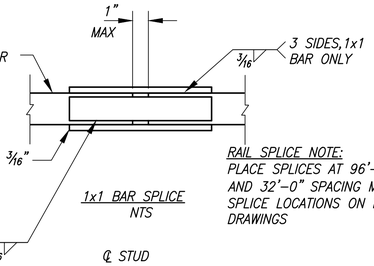

1x1 BAR SPLICE
NTS

RAIL SPLICE NOTE:
PLACE SPLICES AT 96'-0" SPACING MAX AND 32'-0" SPACING MIN. INDICATE SPLICE LOCATIONS ON FABRICATION DRAWINGS

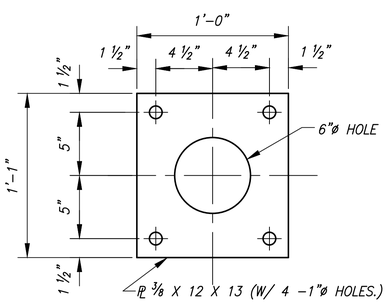

ANCHOR PLATE DETAILS

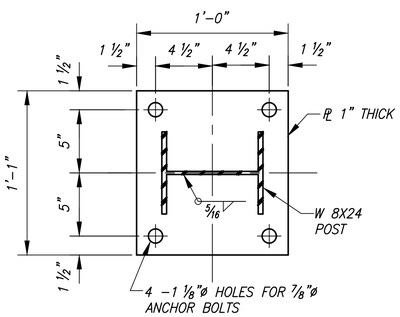

BASE PLATE DETAILS

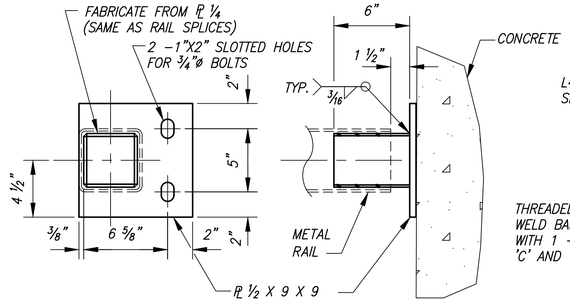

RAIL ATTACHMENT BRACKET

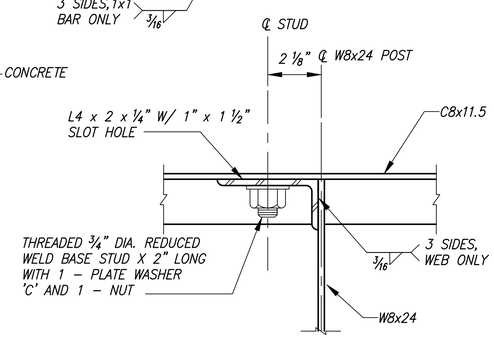

C8x11.5 ATTACHMENT BRACKET

PROVIDE 5 - 7/8"ø ROCKET/KOHLER F-50. LANCASTER MALLEABLE, OR DAYTON/RICHMOND F-62 FLARED THIN SLAB FERRULE INSERTS OR APPROVED EQUAL (TYP.). RESIN-BONDED ANCHORS MAY BE SUBSITITUTED.

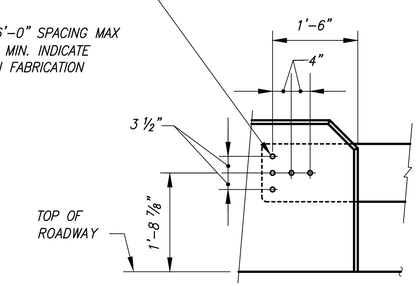

W-BEAM END SECTION DESIGN "F" (SEE STD. PLAN C-7)

OUTSIDE ELEVATION - CONCRETE BARRIER TO GUARDRAIL CONNECTION
EACH END OF BRIDGE RAIL

REVISIONS			
No.	BY	DATE	DESCRIPTION

SURVEYED: COUNTY
DESIGNED: MO
DRAWN: MO
CHECKED: RPD
CRP No. 2626
DATE: 08/28/24

Otak
11241 Willows Road NE, Suite 200
Redmond, WA 98052
425.822.4446
www.otak.com

STATE OF WASHINGTON ROBERT P. DOHERTY 43425 REGISTERED PROFESSIONAL ENGINEER
8/29/2024

KITSAP COUNTY 18 57 WASHINGTON

KITSAP COUNTY
DEPT. OF PUBLIC WORKS
614 DIVISION STREET MS-26
PORT ORCHARD, WA 98366
TEL:(360) 337-5777 FAX:(360) 337-4867

HARPER ESTUARY BARRIER CORRECTION
BRIDGE RAIL DETAILS (2 OF 2)

KITSAP COUNTY, WASHINGTON
SECTION 2, TOWNSHIP 23 NORTH, RANGE 2 EAST, W.M.

SHEET B17
24 OF 55

Plotted: Aug 29, 2024 - 11:17am Matt.OConnell O:\PROJECT\32500\32510\Dwg\05_B17.dwg Layout Name: B18

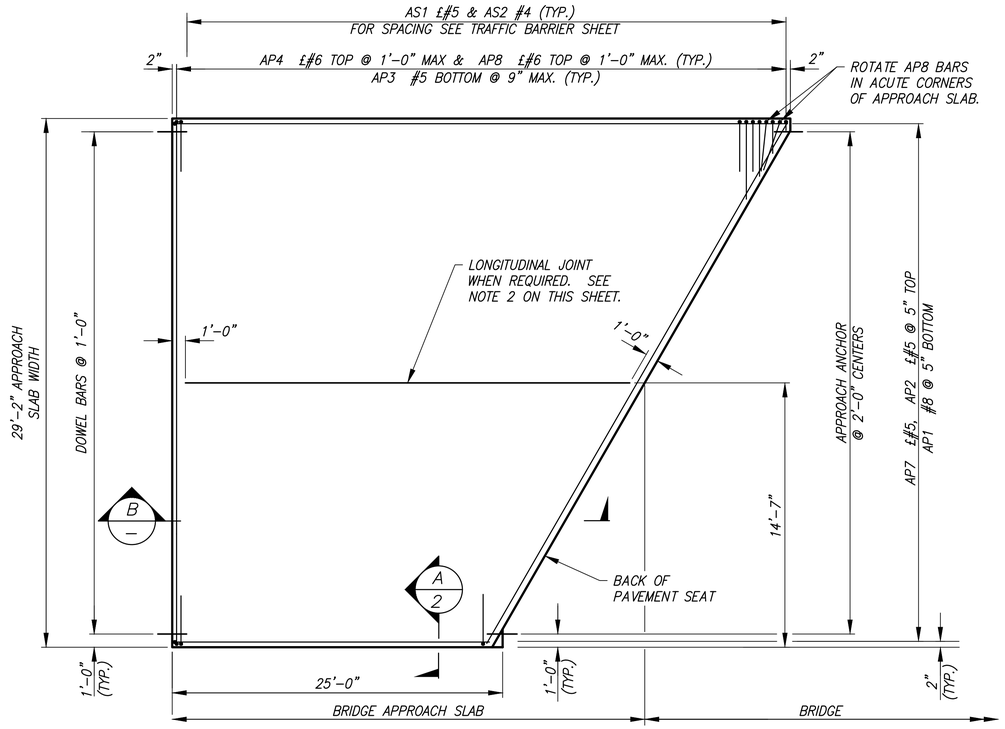

B AP4 HOOKS ARE ONLY REQUIRED AT THE TRAFFIC BARRIER EDGE.

PLAN

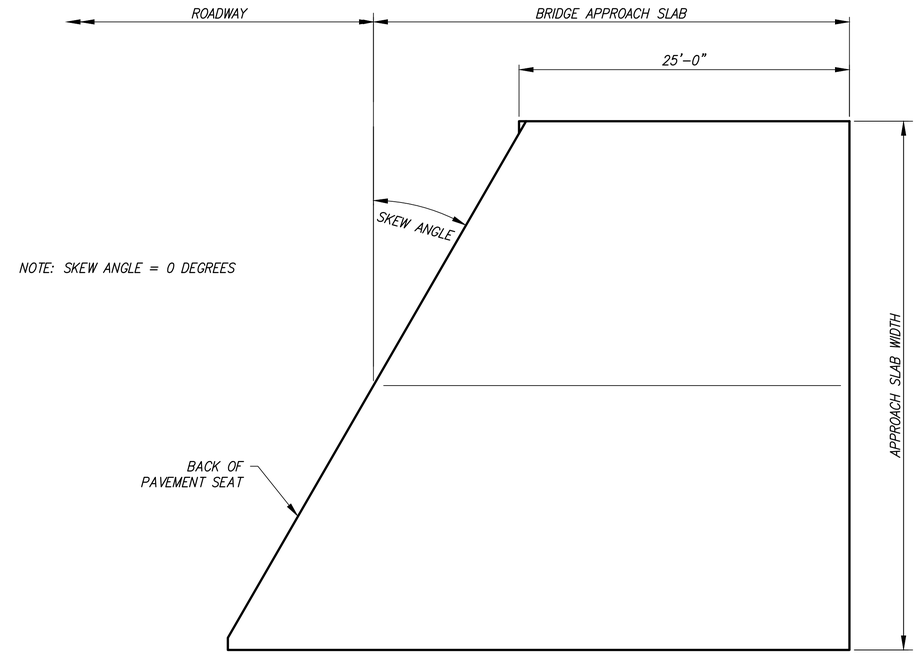

NOTES:

1. ALL EDGES OF BRIDGE APPROACH SLAB SHALL HAVE ½" RADIUS EXCEPT AT LONGITUDINAL JOINTS AND ADJACENT TO L-TYPE ABUTMENTS.
2. LONGITUDINAL JOINTS SHALL BE PLACED ON LANE LINES AND SHALL BE CONSTRUCTED AND SEALED IN ACCORDANCE WITH STD. SPEC. SECTION 5-05.3(8). JOINTS MAY BE EITHER A SAWCUT CRACK CONTROL JOINT OR A CONSTRUCTION JOINT. SAWCUT JOINTS SHALL TERMINATE 1'-0" BEFORE REACHING EDGE OF SLAB AND MUST BE SAW CUT AS SOON AS POSSIBLE AFTER PLACEMENT OF CONCRETE. SEE "LONGITUDINAL JOINT DETAIL" ON BRIDGE APPROACH SLAB DETAILS 2 OF 3.
3. THE MINIMUM LAP SPLICE OF #5 IS 2'-0", £#5 IS 2'-6", £#6 IS 3'-0", AND #8 IS 3'-3". ALL LAP SPLICES SHALL BE STAGGERED SO THAT NO MORE THAN 50% OF REBAR IS SPLICED AT THE SAME LOCATION. LAP SPLICES SHALL BE LOCATED WITHIN THE MIDDLE HALF OF THE BRIDGE APPROACH SLAB. OPTIONAL SPLICES ARE ALLOWED FOR AP4 £#6.
4. FOR TRAFFIC BARRIER DETAILS, INCLUDING ANY BRIDGE APPROACH SLAB BLOCKOUT INFORMATION, SEE TRAFFIC BARRIER SHEETS.

BENDING DIAGRAM

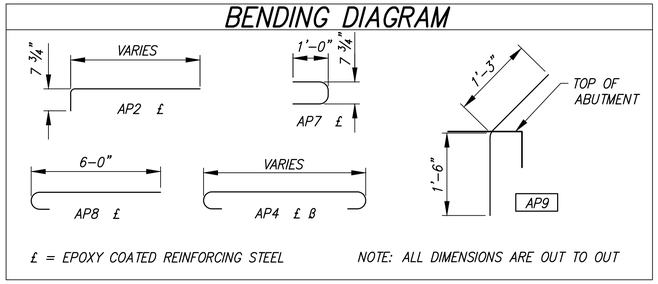

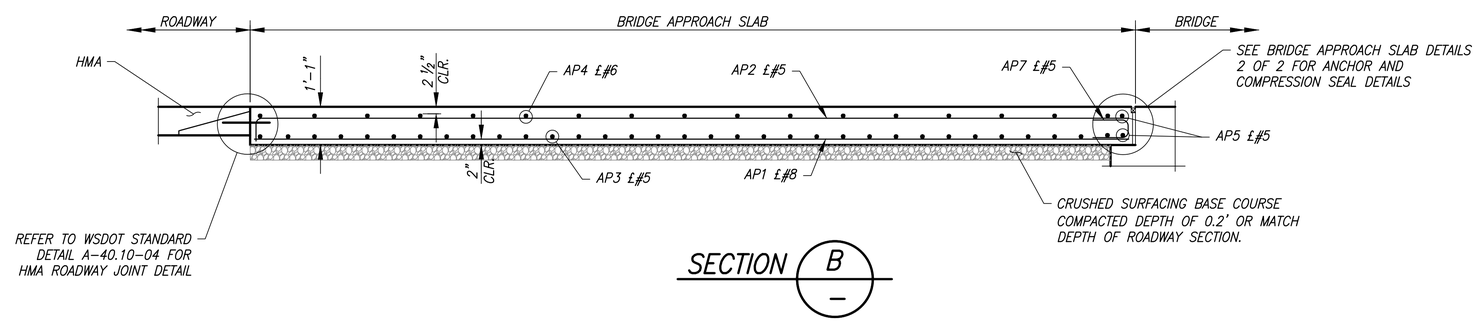

SECTION B/–

REVISIONS			
No.	BY	DATE	DESCRIPTION

SURVEYED: COUNTY
DESIGNED: MO
DRAWN: MO
CHECKED: RPD
CRP No. 2626
DATE: 08/28/24

Otak
11241 Willows Road NE, Suite 200
Redmond, WA 98052
425.822.4446
www.otak.com

ROBERT P. DOHERTY, STATE OF WASHINGTON, 43425, REGISTERED PROFESSIONAL ENGINEER
8/29/2024

KITSAP COUNTY
DEPT. OF PUBLIC WORKS
614 DIVISION STREET MS-26
PORT ORCHARD, WA 98366
TEL:(360) 337-5777 FAX:(360) 337-4867

HARPER ESTUARY BARRIER CORRECTION

APPROACH SLAB DETAILS (1 OF 2)

KITSAP COUNTY, WASHINGTON
SECTION 2, TOWNSHIP 23 NORTH, RANGE 2 EAST, W.M.

Plotted: Aug 29, 2024 – 11:17am Matt.OConnell O:\PROJECT\32500\32510\Dwg\05_B18.dwg Layout Name: B18

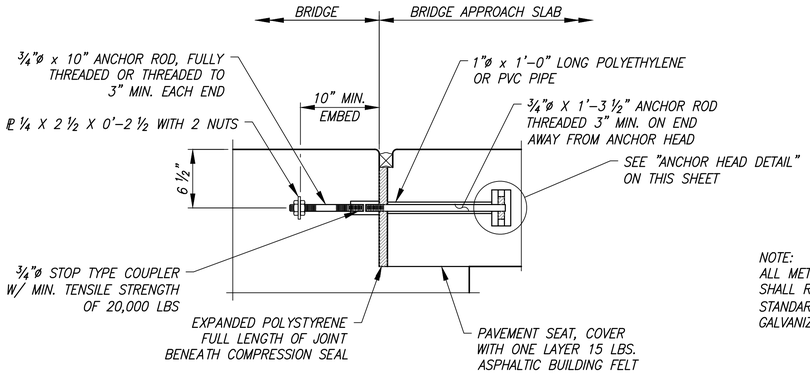

APPROACH ANCHOR – METHOD A

NOTE:
ALL METAL PARTS OF THE APPROACH EXPANSION ANCHOR SHALL RECEIVE ONE COAT OF PAINT CONFORMING TO STANDARD SPECIFICATION SECTION 9-08.1(2)F OR BE GALVANIZED IN ACCORDANCE WITH AASHTO M 232.

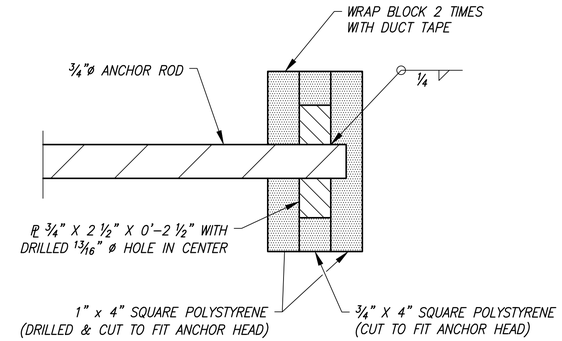

ANCHOR HEAD DETAIL

COMPRESSION SEAL TABLE

D.S. BROWN		WATSON BOWMAN ACME	
SEAL	WIDTH	SEAL	WIDTH
CV-2502	2 ½	WA-250	2 ½

TESTING SHALL BE PER ASTM D 2628 PRIOR TO USE.

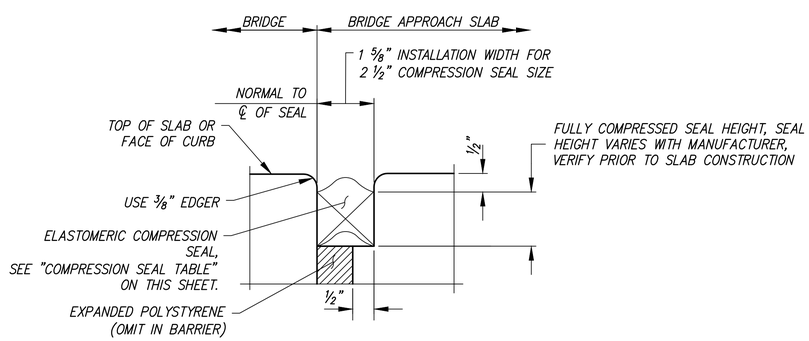

COMPRESSION SEAL DETAIL

EXPANSION JOINT AT BACK OF PAVEMENT SEAT

REVISIONS			
No.	BY	DATE	DESCRIPTION

SURVEYED: COUNTY
DESIGNED: MO
DRAWN: MO
CHECKED: RPD
CRP No. 2626
DATE: 08/28/24

Otak
11241 Willows Road NE, Suite 200
Redmond, WA 98052
425.822.4446
www.otak.com

ROBERT P. DOHERTY, STATE OF WASHINGTON, 43425, REGISTERED PROFESSIONAL ENGINEER
8/29/2024

KITSAP COUNTY 18 57 WASHINGTON

KITSAP COUNTY
DEPT. OF PUBLIC WORKS
614 DIVISION STREET MS-26
PORT ORCHARD, WA 98366
TEL:(360) 337-5777 FAX:(360) 337-4867

HARPER ESTUARY BARRIER CORRECTION

APPROACH SLAB DETAILS (2 OF 2)

KITSAP COUNTY, WASHINGTON
SECTION 2, TOWNSHIP 23 NORTH, RANGE 2 EAST, W.M.

SHEET B19
26 OF 55

Plotted: Aug 29, 2024 – 11:17am Matt.OConnell O:\PROJECT\32500\32510\Dwg\05_B19.dwg Layout Name: B19

F=BAR TO BE FIELD WELDED
T=TRANSVERSE, S=SEISMIC

E=BAR IS TO BE EPOXY COATED

V=BAR DIMENSIONS VARY BETWEEN DIMENSIONS SHOWN ON THIS LINE TO AND THE FOLLOWING LINE

MARK NO.	LOCATION	SIZE	NO. REQ'D	BEND TYPE	TIE OR STIR.	FLD. WELD	EPOXY COAT.	VARIES	NO. EACH	DIMENSIONS (Out to Out) U Ft.	U In.	W Ft.	W In.	X Ft.	X In.	Y Ft.	Y In.	Z Ft.	Z In.	φ1 Deg.	φ2 Deg.	LENGTH Ft.	LENGTH In.	WEIGHT Lbs.
	DRILLED SHAFTS																							
101A	Vertical	14	48	50						60	0.0											60	0.0	22032
101B	Vertical	14	48	50						57	0.0											57	0.0	20930
101C	Vertical	14	48	50						17	0.0											17	0.0	6242
101D	Vertical	14	48	50						20	0.0											20	0.0	7344
102	Supplemental Vertical - Short	14	48	51						27	9.0											29	11.0	10981
103	Supplemental Vertical - Long	14	48	51						34	9.0											36	11.0	13552
104	Spiral - Cap	7	4	67						6	0.0	3	0.0	0	6.0	0	0.0	0	0.0			111	9.0	914
105	Spiral - Shaft Upper	7	4	67						6	0.0	30	10.5	0	6.0	0	0.0	0	0.0			1150	3.0	9404
106	Spiral - Shaft Lower	6	4	67						6	0.0	42	6.0	0	9.0	0	0.0	0	0.0			1057	10.0	6356
	SHAFT CAPS																							
201	Top Longitudinal	11	48	56						42	0.0											45	4.0	11554
202	Bottom Longitudinal	11	48	56						42	0.0											45	4.0	11554
203	Bottom Stirrup	6	164	72	T					8	6.0	4	0.0	4	0.0							17	6.0	4303
204	Top Stirrup	6	164	58	T					8	6.0											9	12.0	2459
205	Ties	6	556	52						4	0.0											5	4.0	4488
206	Side Longitudinal	8	16	56						42	0.0											44	3.0	1890
	ABUTMENT WALLS																							
301	Longitudinal Bottom	8	260	54			E			9	4.0											10	5.0	7260
302	Longitudinal Top - Center	8	204	50			E			14	1.0											14	1.0	7657
303	Longitudinal Top - End	8	48	50			E			18	5.0											18	5.0	2360
304	Horizontal Bottom	5	96	56			E			42	2.0											43	7.0	4363
305	Horizontal Top	5	48	56			E			4	2.0											5	7.0	279
306	Top Tie	5	130	58	T		E			2	3.0											3	1.0	417
	CURTAIN WALLS																							
401	Longitudinal - Bottom	5	64	50			E			5	0.0											5	0.0	334
402	Longitudinal - Top	5	64	50			E			18	5.0											18	5.0	1229
403	Horizontal	5	232	56			E			5	8.0											7	1.0	1711
	GIRDER STOPS																							
501	Longitudinal	5	36	74			E			2	3.0	2	0.0	2	0.0							5	12.0	225
502	Transverse	5	36	74			E			1	0.0	2	0.0	2	0.0							4	9.0	180
	END DIAPHRAGMS																							
601	Longitudinal #6	6	8	56						32	9.0											34	5	414
602	Longitudinal #4	4	20	56						33	0.0											34	1	456
603	Stirrup Type 1	4	68	73	T					0	10.0	3	8.0	3	8.0							8	9	397
604	Stirrup Type 2	4	68	68	T					1	8.0	2	8.0	0	6.0	0	6.0					5	0	228
605	Tie	4	68	58	T					1	11.0											2	6	115
	INTERMEDIATE DIAPHRAGMS																							
701	Continuous Longitudinal	7	9	56						27	6.0											29	6	542
702	Longitudinal	4	144	56						3	9.0											4	10	469
703	Stirrups	4	180	56						2	2.0											3	3	396
	DECK																							
801	Longitudinal	6	198	50			E			45	0.0											45	0.0	13383
802	Transverse	6	255	52			E			33	0.0											34	4.0	13166
803	Longitudinal	4	112	50			E			33	9.0											33	9.0	2525

REINFORCEMENT BENDING DIAGRAMS

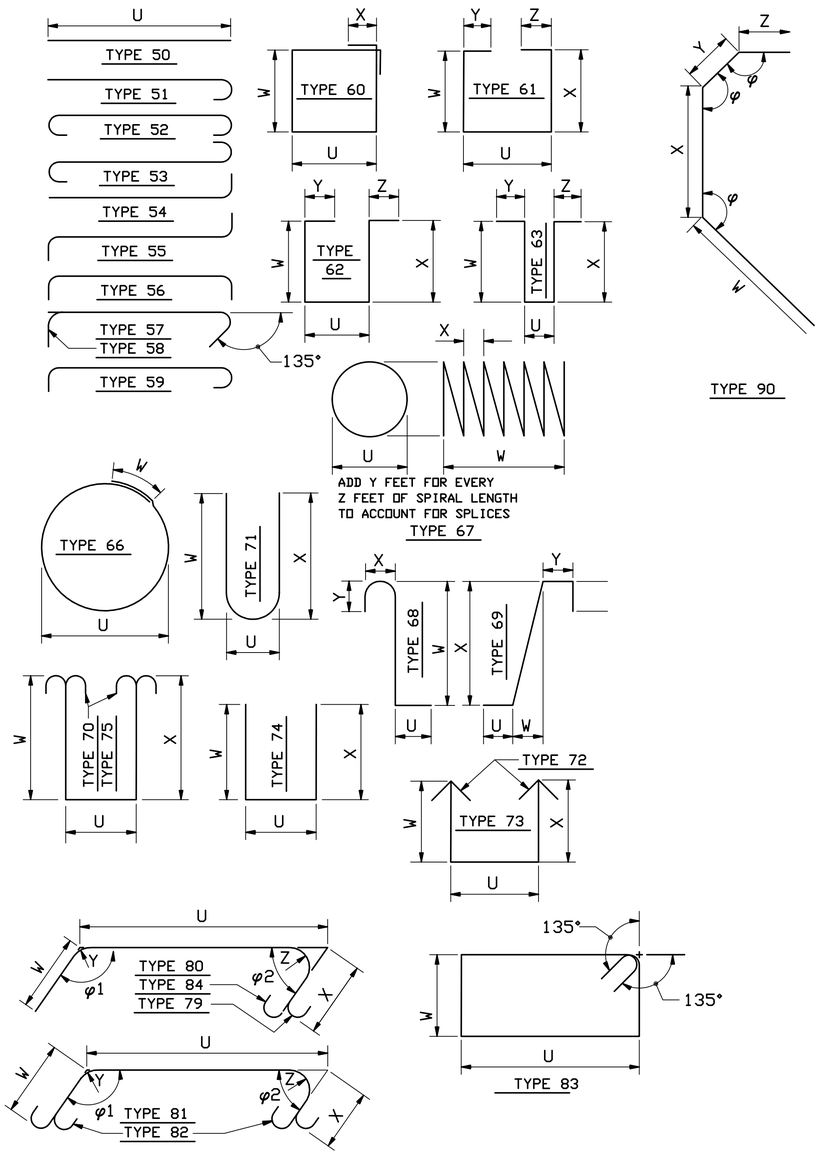

NOTES:

1. BEND FOR TRANSVERSE BARS DUE TO ROADWAY CROWN CONDITIONS HAS NOT BEEN SHOWN. THESE BARS SHALL BE BENT AS REQUIRED TO CONFORM TO THE CONFIGURATION OF THE STRUCTURE.

2. THE BARLIST TABLE IS PROVIDED FOR REFERENCE ONLY, AND REINF. DETAILS SHALL BE DETERMINED BY CONTRACTOR FROM THE PLANS.

REVISIONS

No.	BY	DATE	DESCRIPTION

SURVEYED: COUNTY
DESIGNED: MO
DRAWN: MO
CHECKED: RPD
CRP No. 2626
DATE: 08/28/24

Otak
11241 Willows Road NE, Suite 200
Redmond, WA 98052
425.822.4446
www.otak.com

ROBERT P. DOHERTY, STATE OF WASHINGTON, 43425, REGISTERED PROFESSIONAL ENGINEER
8/29/2024

KITSAP COUNTY
DEPT. OF PUBLIC WORKS
614 DIVISION STREET MS-26
PORT ORCHARD, WA 98366
TEL:(360) 337-5777 FAX:(360) 337-4867

HARPER ESTUARY BARRIER CORRECTION

BARLIST

KITSAP COUNTY, WASHINGTON
SECTION 2, TOWNSHIP 23 NORTH, RANGE 2 EAST, W.M.

Plotted: Aug 29, 2024 – 11:17am Matt.OConnell O:\PROJECT\32500\32510\Dwg\05_B20.dwg Layout Name: B20

WALL NOTES

1. GEOSYNTHETIC RETAINING WALL WITH CONCRETE FASCIA SHALL BE CONSTRUCTED PER WSDOT STANDARD PLANS D-3.09-00 AND D-3.11-03.
2. FASCIA PANEL SHALL NOT BE INSTALLED UNTIL A MINIMUM OF 14 DAYS AFTER FULL HEIGHT OF GEOSYNTHETIC REINFORCEMENT, REINFORCED WALL BACKFILL, AND ROADWAY EMBANKMENT FILL ARE IN PLACE AND COMPACTED TO THE TOP OF GEOSYNTHETIC REINFORCEMENT ON BOTH SIDES OF BACK-TO-BACK WALLS.
3. FASCIA PANEL SHALL NOT BE INSTALLED WITHIN 100 FEET, MEASURED ALONG CONSTRUCTION CENTERLINE, OF A PORTION OF WALL WHERE THE GEOSYNTHETIC REINFORCEMENT AND ROADWAY EMBANKMENT FILL HAVE NOT BEEN COMPLETED AND IN PLACE FOR LESS THAN 14 DAYS.
4. REFER TO PROJECT GEOTECHNICAL REPORT FOR WALL FOUNDATION REQUIREMENTS.
5. OFFSETS ARE SHOWN TO FACE OF FORMLINER. SMOOTH FINISH WILL PROTRUDE 1" FROM OFFSET VALUE SHOWN.
6. GRW = GEOSYNTHETIC RETAINING WALL
   RCW = REINFORCED CONCRETE WALL

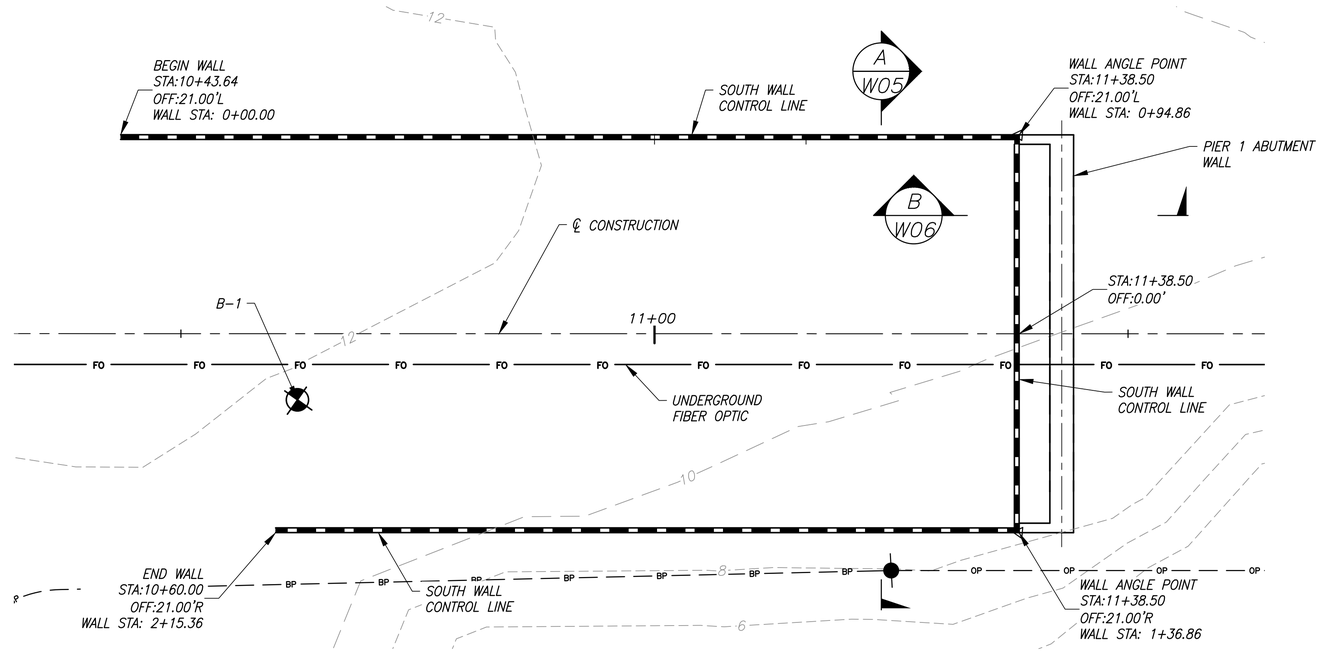

SOUTH WALL PLAN

SCALE: 1/8" = 1'-0"

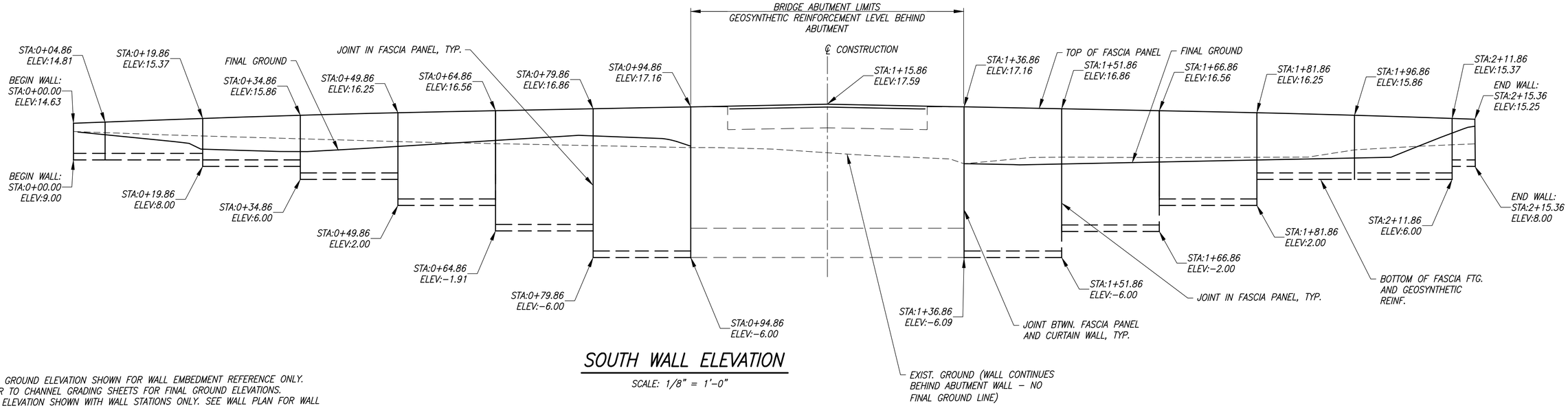

SOUTH WALL ELEVATION

SCALE: 1/8" = 1'-0"

NOTE:
1. FINAL GROUND ELEVATION SHOWN FOR WALL EMBEDMENT REFERENCE ONLY. REFER TO CHANNEL GRADING SHEETS FOR FINAL GROUND ELEVATIONS.
2. WALL ELEVATION SHOWN WITH WALL STATIONS ONLY. SEE WALL PLAN FOR WALL STATIONING AND ℄ CONSTRUCTION STATIONING.

REVISIONS			
No.	BY	DATE	DESCRIPTION

SURVEYED: COUNTY
DESIGNED: MO
DRAWN: MO
CHECKED: RPD
CRP No. 2626
DATE: 08/28/24

Otak
11241 Willows Road NE, Suite 200
Redmond, WA 98052
425.822.4446
www.otak.com

ROBERT P. DOHERTY — STATE OF WASHINGTON — 43425 — REGISTERED PROFESSIONAL ENGINEER
8/29/2024

KITSAP COUNTY 18 57 WASHINGTON

KITSAP COUNTY
DEPT. OF PUBLIC WORKS
614 DIVISION STREET MS-26
PORT ORCHARD, WA 98366
TEL:(360) 337-5777 FAX:(360) 337-4867

HARPER ESTUARY BARRIER CORRECTION

SOUTH WALL
PLAN AND ELEVATION

KITSAP COUNTY, WASHINGTON
SECTION 2, TOWNSHIP 23 NORTH, RANGE 2 EAST, W.M.

SHEET W01
28 OF 55

Plotted: Aug 29, 2024 - 11:18am Matt.OConnell O:\PROJECT\32500\32510\Dwg\05_W01-W04.dwg Layout Name: W01

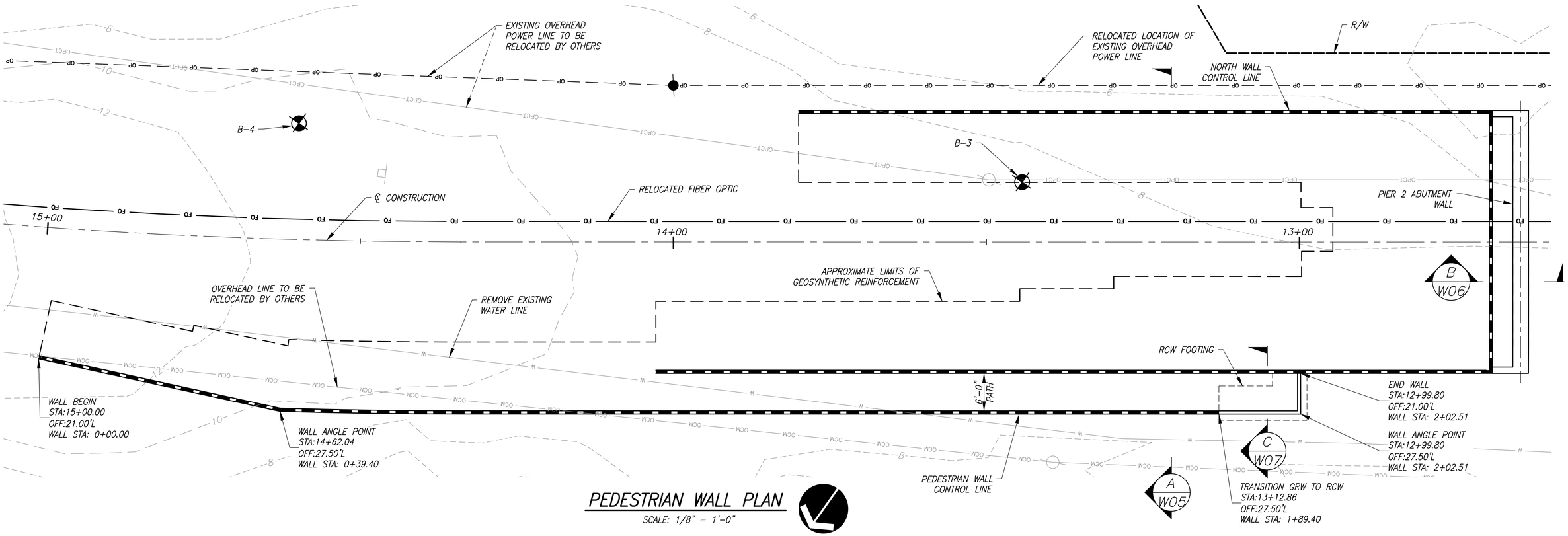

PEDESTRIAN WALL PLAN

SCALE: 1/8" = 1'-0"

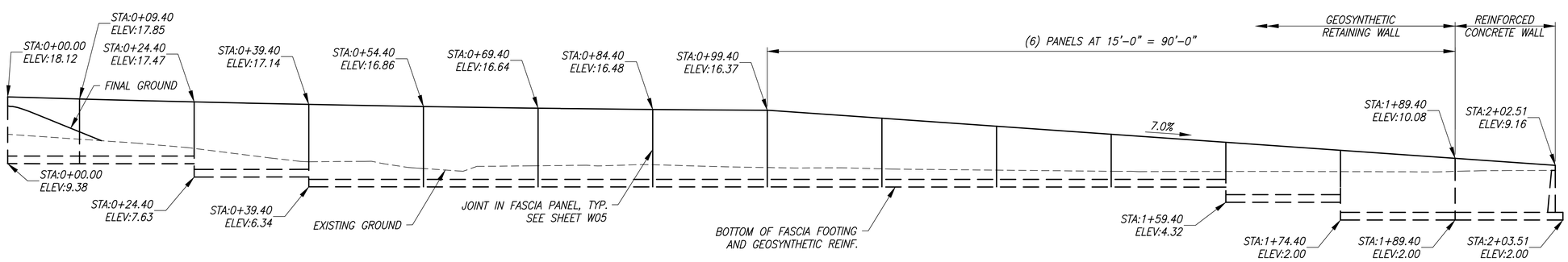

PEDESTRIAN WALL ELEVATION

SCALE: 1/8" = 1'-0"

NOTE:
1. FINAL GROUND ELEVATION SHOWN FOR WALL EMBEDMENT REFERENCE ONLY. REFER TO CHANNEL GRADING SHEETS FOR FINAL GROUND ELEVATIONS.
2. WALL ELEVATION SHOWN WITH WALL STATIONS ONLY. SEE WALL PLAN FOR WALL STATIONING AND ℄ CONSTRUCTION STATIONING.

REVISIONS			
No.	BY	DATE	DESCRIPTION

SURVEYED: COUNTY
DESIGNED: MO
DRAWN: MO
CHECKED: RPD
CRP No. 2626
DATE: 08/28/24

Otak
11241 Willows Road NE, Suite 200
Redmond, WA 98052
425.822.4446
www.otak.com

ROBERT P. DOHERTY, STATE OF WASHINGTON, 43425, REGISTERED PROFESSIONAL ENGINEER
9/5/2024

KITSAP COUNTY 18 57 WASHINGTON

KITSAP COUNTY
DEPT. OF PUBLIC WORKS
614 DIVISION STREET MS-26
PORT ORCHARD, WA 98366
TEL:(360) 337-5777 FAX:(360) 337-4867

HARPER ESTUARY BARRIER CORRECTION
PEDESTRIAN WALL
PLAN AND ELEVATION
KITSAP COUNTY, WASHINGTON
SECTION 2, TOWNSHIP 23 NORTH, RANGE 2 EAST, W.M.

SHEET W02
29 OF 55

Plotted: Sep 04, 2024 – 3:44pm Matt.OConnell O:\PROJECT\32500\32510\Dwg\05_W01-W04.dwg Layout Name: W02

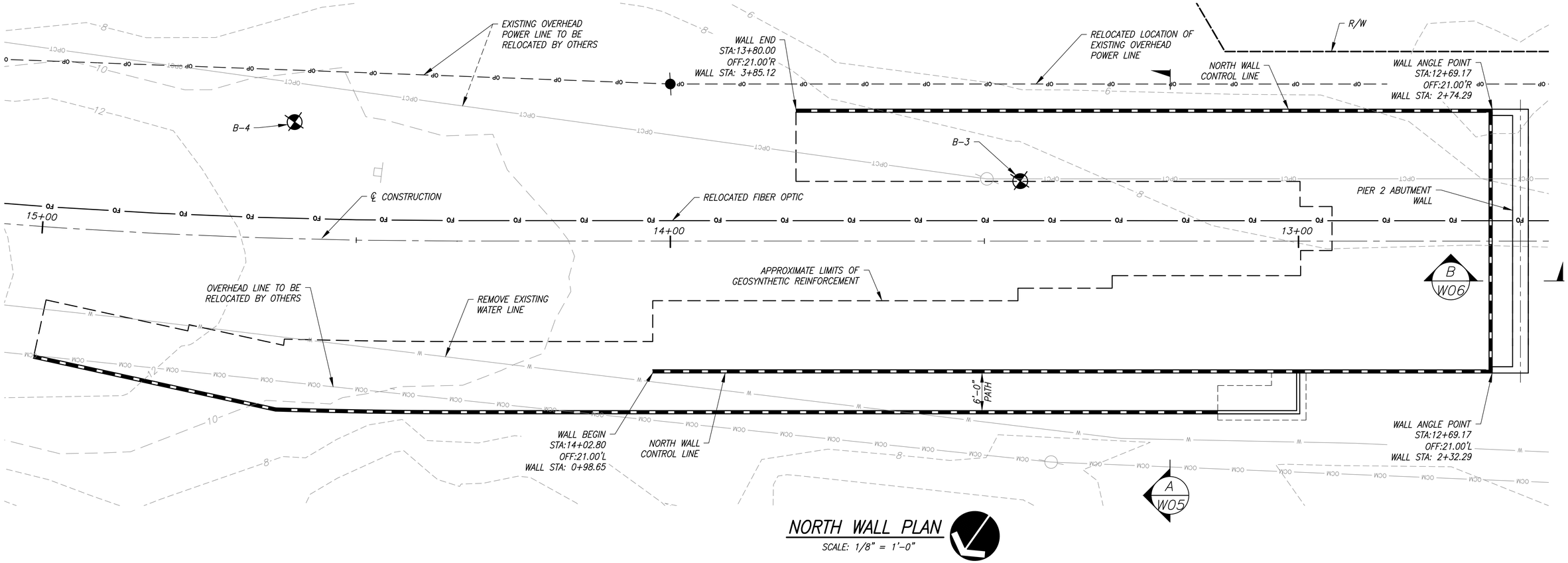

NORTH WALL PLAN

SCALE: 1/8" = 1'-0"

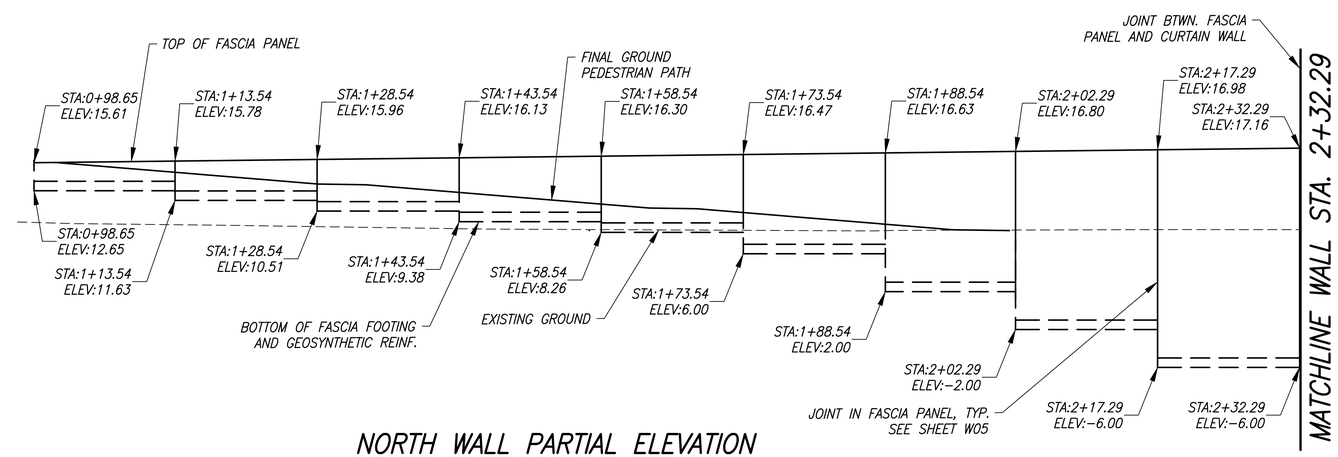

NORTH WALL PARTIAL ELEVATION

SCALE: 1/8" = 1'-0"

NOTE:
1. FINAL GROUND ELEVATION SHOWN FOR WALL EMBEDMENT REFERENCE ONLY. REFER TO CHANNEL GRADING SHEETS FOR FINAL GROUND ELEVATIONS.
2. WALL ELEVATION SHOWN WITH WALL STATIONS ONLY. SEE WALL PLAN FOR WALL STATIONING AND ℄ CONSTRUCTION STATIONING.

REVISIONS			
No.	BY	DATE	DESCRIPTION

SURVEYED: COUNTY
DESIGNED: MO
DRAWN: MO
CHECKED: RPD
CRP No. 2626
DATE: 08/28/24

Otak
11241 Willows Road NE, Suite 200
Redmond, WA 98052
425.822.4446
www.otak.com

ROBERT P. DOHERTY, STATE OF WASHINGTON, 43425, REGISTERED PROFESSIONAL ENGINEER
8/29/2024

KITSAP COUNTY
DEPT. OF PUBLIC WORKS
614 DIVISION STREET MS-26
PORT ORCHARD, WA 98366
TEL:(360) 337-5777 FAX:(360) 337-4867

HARPER ESTUARY BARRIER CORRECTION

NORTH WALL PLAN AND ELEVATION (1 OF 2)

KITSAP COUNTY, WASHINGTON
SECTION 2, TOWNSHIP 23 NORTH, RANGE 2 EAST, W.M.

Plotted: Aug 29, 2024 - 11:19am Matt.OConnell O:\PROJECT\32500\32510\Dwg\05_W01-W04.dwg Layout Name: W03

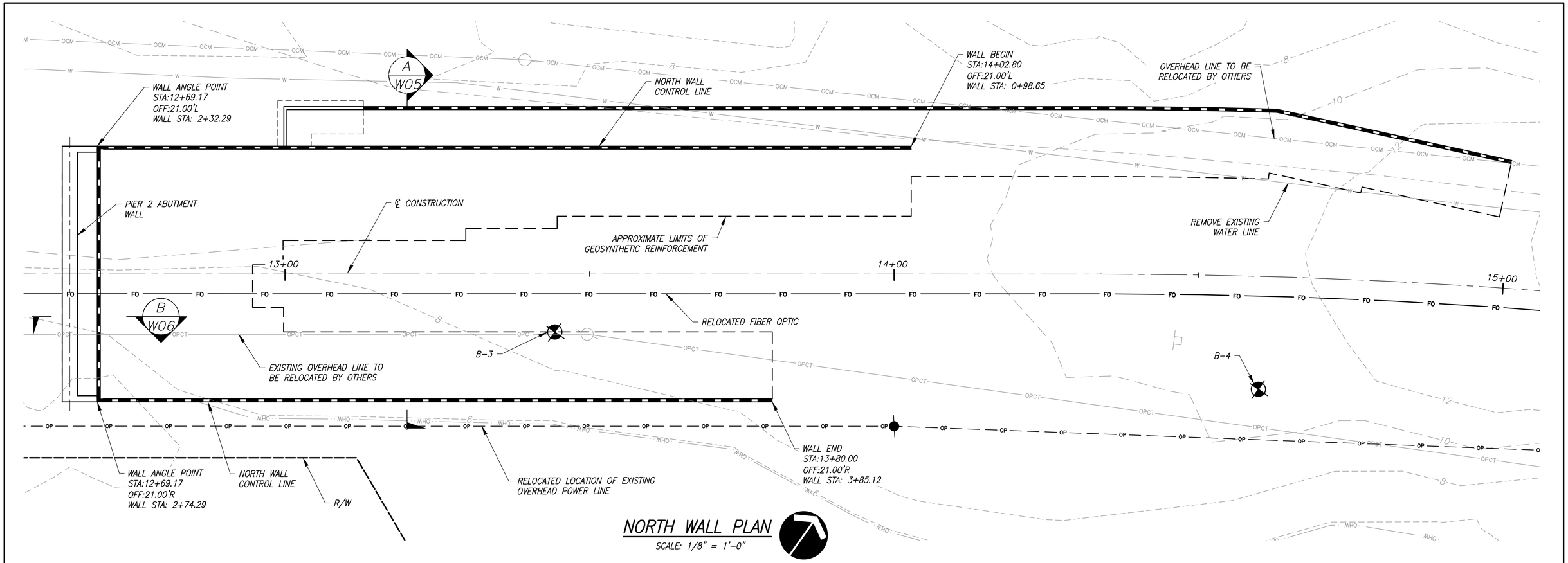

NORTH WALL PLAN

SCALE: 1/8" = 1'-0"

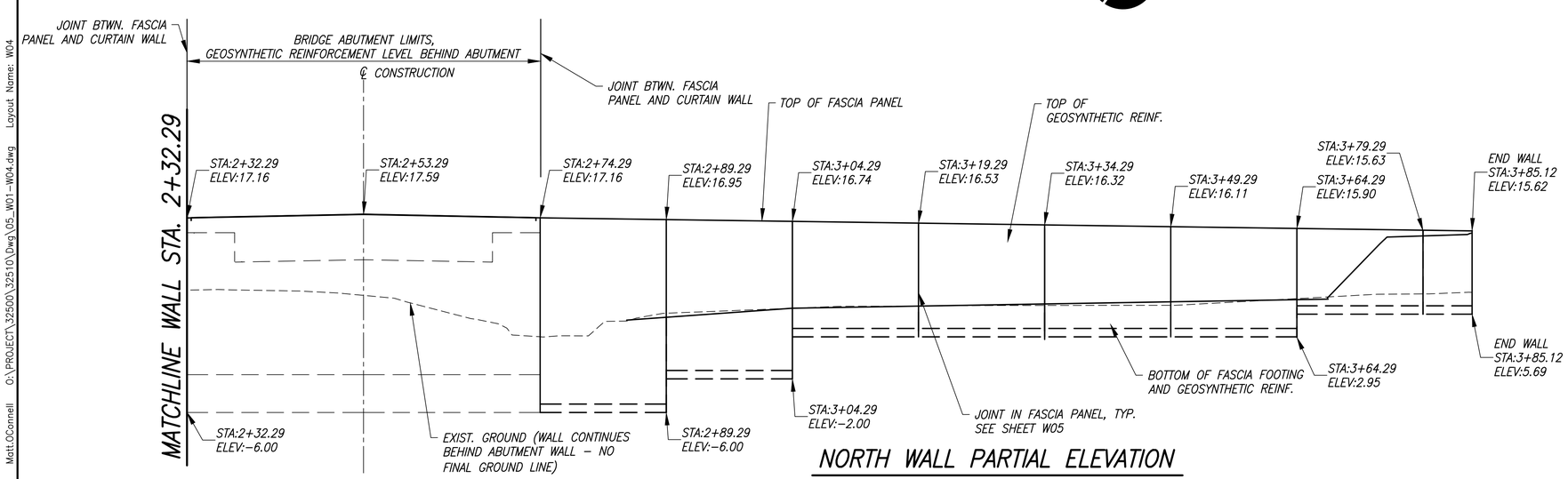

NORTH WALL PARTIAL ELEVATION

SCALE: 1/8" = 1'-0"

NOTE:
1. FINAL GROUND ELEVATION SHOWN FOR WALL EMBEDMENT REFERENCE ONLY. REFER TO CHANNEL GRADING SHEETS FOR FINAL GROUND ELEVATIONS.
2. WALL ELEVATION SHOWN WITH WALL STATIONS ONLY. SEE WALL PLAN FOR WALL STATIONING AND ℄ CONSTRUCTION STATIONING.

REVISIONS			
No.	BY	DATE	DESCRIPTION

SURVEYED: COUNTY
DESIGNED: MO
DRAWN: MO
CHECKED: RPD
CRP No. 2626
DATE: 08/28/24

Otak
11241 Willows Road NE, Suite 200
Redmond, WA 98052
425.822.4446
www.otak.com

ROBERT P. DOHERTY, STATE OF WASHINGTON, 43425, REGISTERED PROFESSIONAL ENGINEER
8/29/2024

KITSAP COUNTY 18 57 WASHINGTON

KITSAP COUNTY
DEPT. OF PUBLIC WORKS
614 DIVISION STREET MS-26
PORT ORCHARD, WA 98366
TEL:(360) 337-5777 FAX:(360) 337-4867

HARPER ESTUARY BARRIER CORRECTION

NORTH WALL
PLAN AND ELEVATION (2 OF 2)

KITSAP COUNTY, WASHINGTON
SECTION 2, TOWNSHIP 23 NORTH, RANGE 2 EAST, W.M.

SHEET W04
31 OF 55

Plotted: Aug 29, 2024 - 11:19am Matt.OConnell O:\PROJECT\32500\32510\Dwg\05_W01-W04.dwg Layout Name: W04

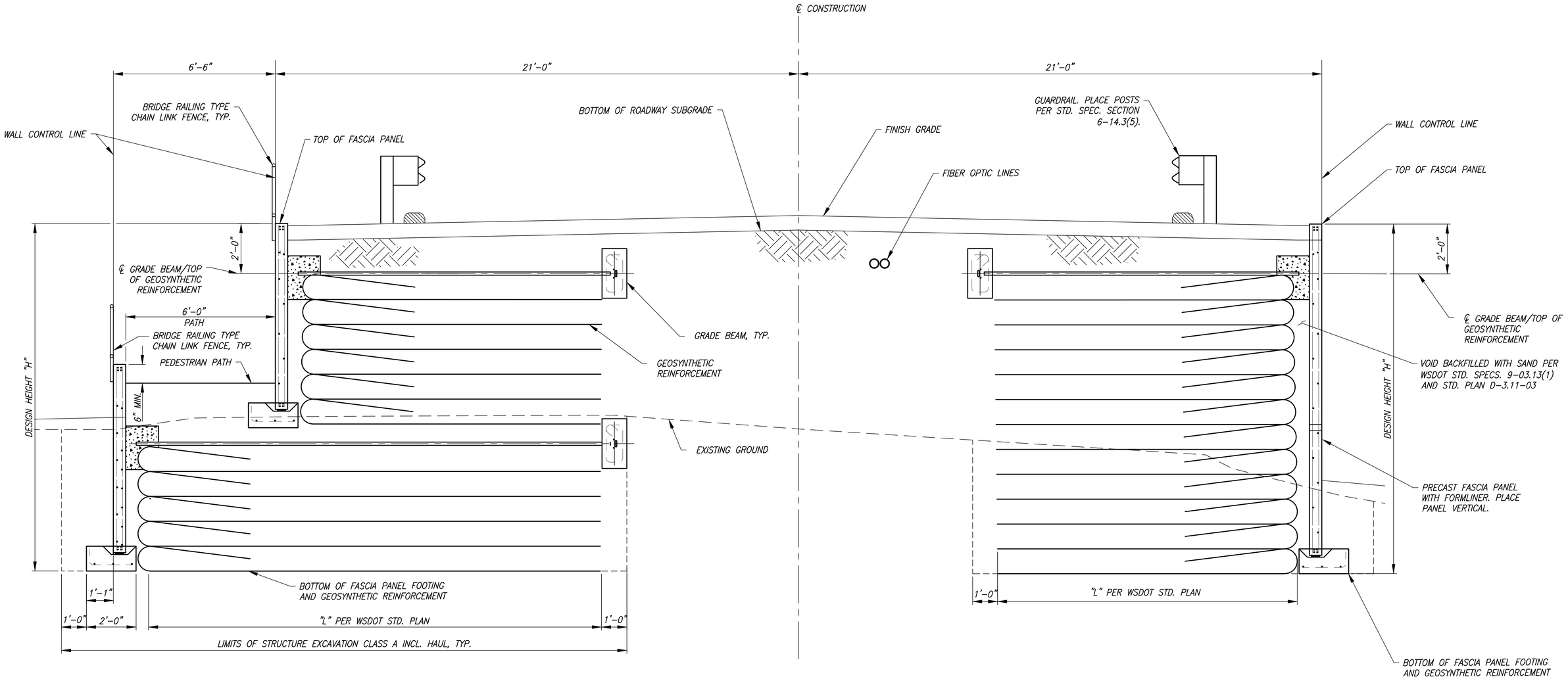

WALL SECTION A

SCALE: 1/4" = 1'-0"
REFER TO SHEETS W01-W04 FOR SECTION LOCATION

NOTE:
SECTION SHOWN AT NORTH WALL AND PEDESTRIAN WALL. OMIT PEDESTRIAN WALL AT SOUTH WALL. PEDESTRIAN WALL LIMITS SHOWN ON SHEET W02.

REVISIONS			
No.	BY	DATE	DESCRIPTION

SURVEYED: COUNTY
DESIGNED: MO
DRAWN: MO
CHECKED: RPD
CRP No. 2626
DATE: 08/28/24

Otak
11241 Willows Road NE, Suite 200
Redmond, WA 98052
425.822.4446
www.otak.com

ROBERT P. DOHERTY, STATE OF WASHINGTON, 43425, REGISTERED PROFESSIONAL ENGINEER
8/29/2024

KITSAP COUNTY
DEPT. OF PUBLIC WORKS
614 DIVISION STREET MS-26
PORT ORCHARD, WA 98366
TEL:(360) 337-5777 FAX:(360) 337-4867

HARPER ESTUARY BARRIER CORRECTION

RETAINING WALL SECTION AND DETAILS (1 OF 3)

KITSAP COUNTY, WASHINGTON
SECTION 2, TOWNSHIP 23 NORTH, RANGE 2 EAST, W.M.

SHEET W05
32 OF 55

Plotted: Aug 29, 2024 - 11:19am Matt.OConnell O:\PROJECT\32500\32510\Dwg\05_W05-W06.dwg Layout Name: W05

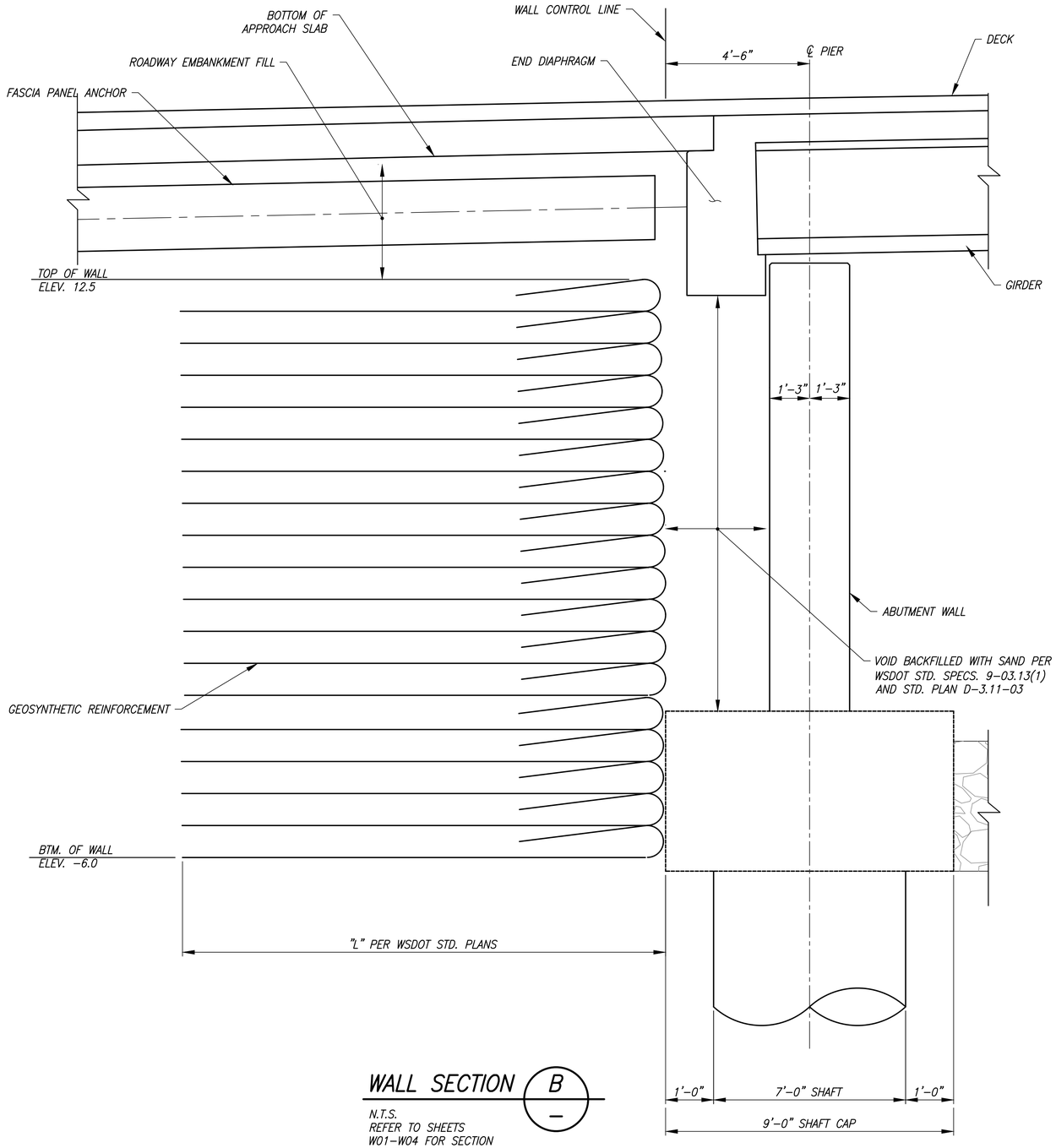

WALL SECTION B

N.T.S.
REFER TO SHEETS W01-W04 FOR SECTION LOCATION

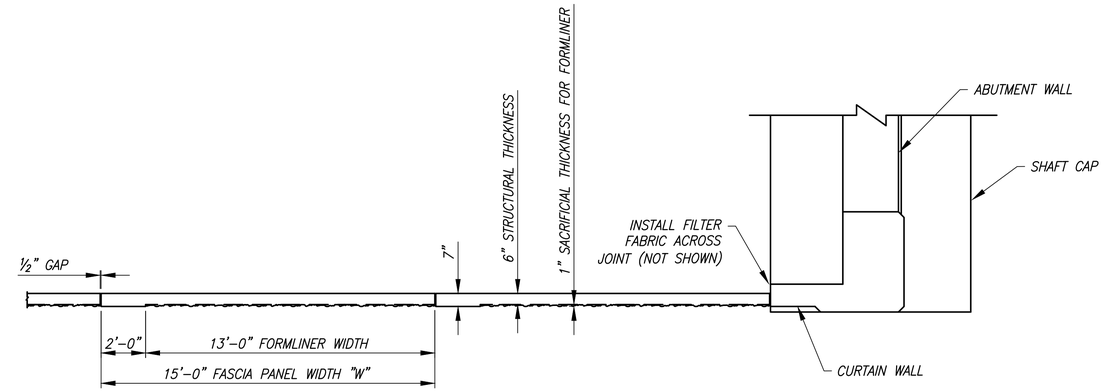

CONCRETE FASCIA PANEL PLAN

N.T.S.
SHOWN AT TYPICAL BRIDGE CORNER. SIMILAR AT RCW. PROVIDE FORMLINER ON RCW.

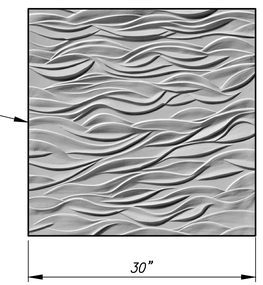

FORMLINER DETAIL

N.T.S.

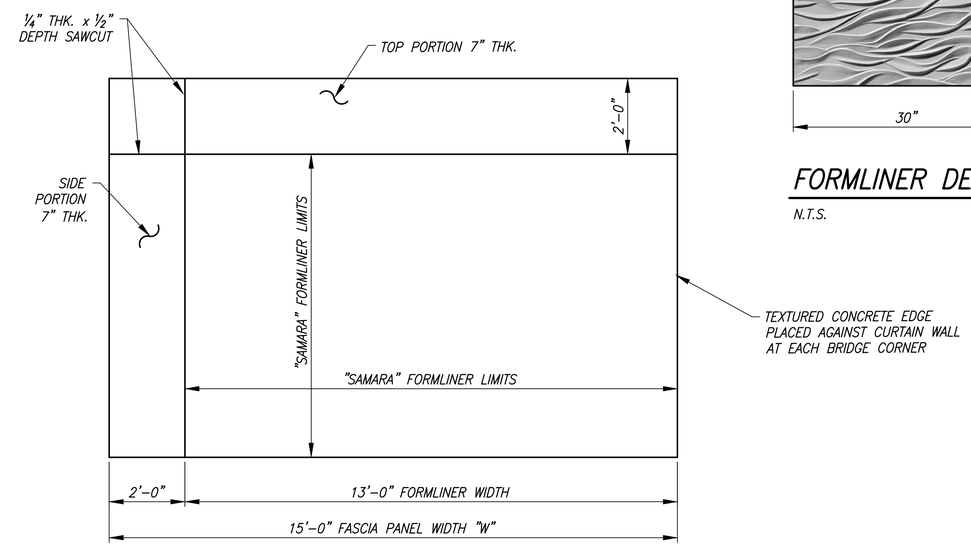

CONCRETE FASCIA PANEL ELEVATION WITH FORMLINER FINISH

N.T.S.
FORMLINER NOTES:
1. PROVIDE SURFACES FINISH AND FORMLINER TO GEOSYNTHETIC RETAINING WALL FASCIA PANELS AND FACE OF REINFORCED CONCRETE RETAINING WALL.
2. PROVIDE CLASS 1 SURFACE FINISH TO 2'-0" BORDER WITHOUT FORMLINER.
3. FORMLINER SHALL BE ORIENTED AS SHOWN.
4. FORMLINERS SHALL BE SIZED TO MINIMIZE JOINTS TO THE MAXIMUM EXTENT FEASIBLE. NO JOINTS WILL BE ALLOWED WITHIN THE TYPICAL 13'-0" WIDE BY 10'-0" HIGH DIMENSIONS SHOWN. IF JOINTS ARE NEEDED OUTSIDE OF THESE LIMITS, THEY SHALL BE LOCATED BELOW GROUND TO THE EXTENT POSSIBLE.
5. PANEL HEIGHT AND WIDTH VARY, MAINTAIN COSTANT 2'-0" BORDER WITHOUT FORMLINER AND VARY FORMLINER DIMENSIONS AS NEEDED.

REVISIONS			
No.	BY	DATE	DESCRIPTION

SURVEYED: COUNTY
DESIGNED: MO
DRAWN: MO
CHECKED: RPD
CRP No. 2626
DATE: 08/28/24

Otak
11241 Willows Road NE, Suite 200
Redmond, WA 98052
425.822.4446
www.otak.com

ROBERT P. DOHERTY, STATE OF WASHINGTON, 43425, REGISTERED PROFESSIONAL ENGINEER
8/29/2024

KITSAP COUNTY 18 57 WASHINGTON

KITSAP COUNTY
DEPT. OF PUBLIC WORKS
614 DIVISION STREET MS-26
PORT ORCHARD, WA 98366
TEL:(360) 337-5777 FAX:(360) 337-4867

HARPER ESTUARY BARRIER CORRECTION

RETAINING WALL
SECTION AND DETAILS (2 OF 3)

KITSAP COUNTY, WASHINGTON
SECTION 2, TOWNSHIP 23 NORTH, RANGE 2 EAST, W.M.

SHEET W06
33 OF 55

Plotted: Aug 29, 2024 – 11:19am Matt.OConnell O:\PROJECT\32500\32510\Dwg\05_W05-W06.dwg Layout Name: W06

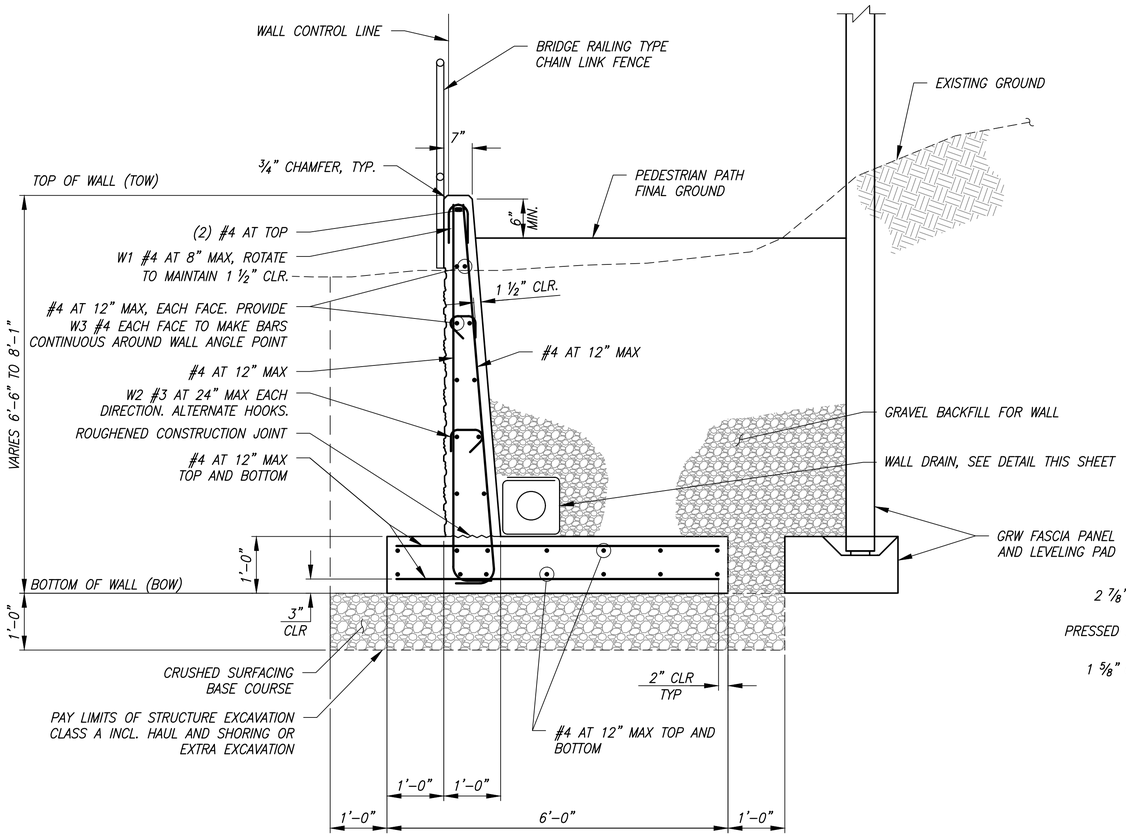

WALL SECTION C / W02

SCALE: ¾" = 1'-0"

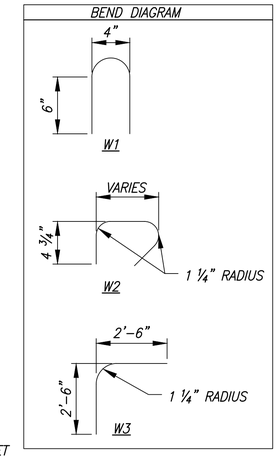

CHAIN LINK FENCE NOTES

1. CHAIN LINK FENCE IS DESIGNED FOR FALL PROTECTION AND LOADING IN ACCORDANCE WITH WAC 296-880 AND AASHTO LRFD BRIDGE DESIGN SPECIFICATIONS, 9TH EDITION.
2. INSTALL ALL POSTS NORMAL TO GRADE IN THE LONGITUDINAL DIRECTION AND PLUMB IN THE TRANSVERSE DIRECTION.
3. PROVIDE HORIZONTAL RAILS AND FABRIC IN SHORT SPANS BETWEEN POSTS AT EXPANSION JOINTS AND WALL HORIZONTAL ANGLE POINTS.
4. STRETCH CHAIN LINK FABRIC AND FASTEN TO END POSTS AT 1'-3" MAX. SPA., AND TO INTERMEDIATE POSTS AND HORIZONTAL RAILS AT 1'-2" MAX. SPA.
5. PROVIDE STEEL PIPE FOR POSTS AND RAILS CONFORMING TO ASTM SPECIFICATION ASTM F1043 SCHEDULE 40 (MINIMUM YIELD STRENGTH OF 50KSI. PROVIDE ALL OTHER MATERIAL FOR CHAIN LINK FENCE (FABRIC AND HARDWARE) CONFORMING TO AASHTO SPECIFICATION M181. FITTING SHALL BE PRESSED STEEL. SEE WSDOT STANDARD SPECIFICATIONS 9-16.1.
6. ALL STEEL PARTS SHALL BE HOT DIP GALVANIZED IN ACCORDANCE WITH AASHTO M111, M232, OR ASTM F2329 AFTER FABRICATION.
7. CHAIN LINK FABRIC SHALL BE VINYL COATED BLACK. POSTS, RAILS, AND HARDWARE SHALL BE POWDER COATED BLACK AFTER GALVANIZING IN ACCORDANCE WITH WSDOT STANDARD SPECIFICATIONS SECTION 6-07.3(11). NUTS, WASHERS AND EXPOSED ENDS OF EMBEDDED BOLTS SHALL BE FIELD PAINTED BLACK AFTER INSTALLATION CLOSELY MATCHING THE POWDER COATING COLOR. AFTER INSTALLATION, ANY SURFACES WITH PAINT OR POWDER COAT DAMAGE SHALL BE REPAIRED IN ACCORDANCE WITH WSDOT STANDARD SPECIFICATION SECTION 6-07.3(10)P OR SECTION 6-07.3(11)B6, RESPECTIVELY.
8. CHAIN LINK FABRIC SHALL BE 2" ABOVE CONCRETE SURFACE. KNUCKLE SELVAGE AT TOP AND BOTTOM OF FENCE.
9. PROVIDE ONE STRETCHER BAR AT THE BEGINNING AND END OF EACH RUN.
10. PROVIDE NO MORE THAN TWO FABRIC SPLICES PER RUN, SPACED NO LESS THAN 50 FEET.
11. FENCE POSTS SHALL BE SPACED EQUALLY BETWEEN ANGLE POINTS AND ALONG CONTINUOUS RUNS OF FENCE.

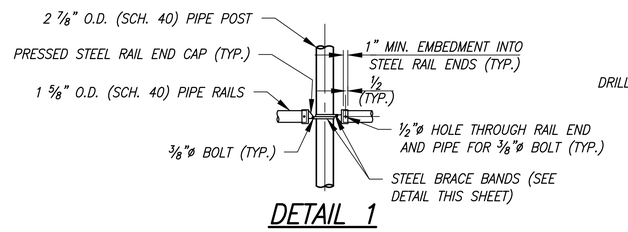

DETAIL 1

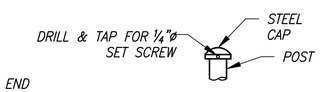

DETAIL 2

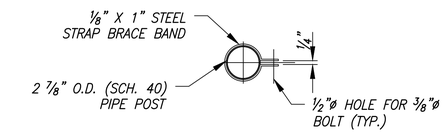

BRACE BAND DETAIL

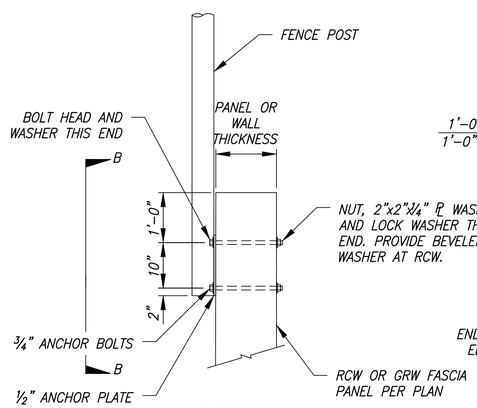

DETAIL A

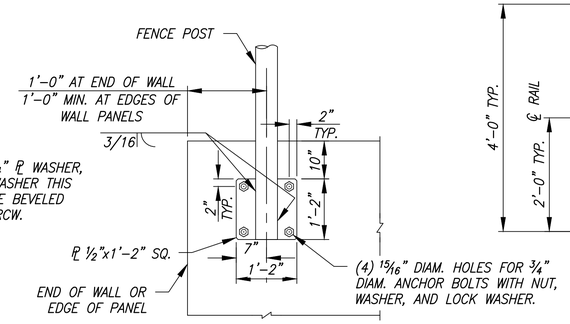

VIEW B-B

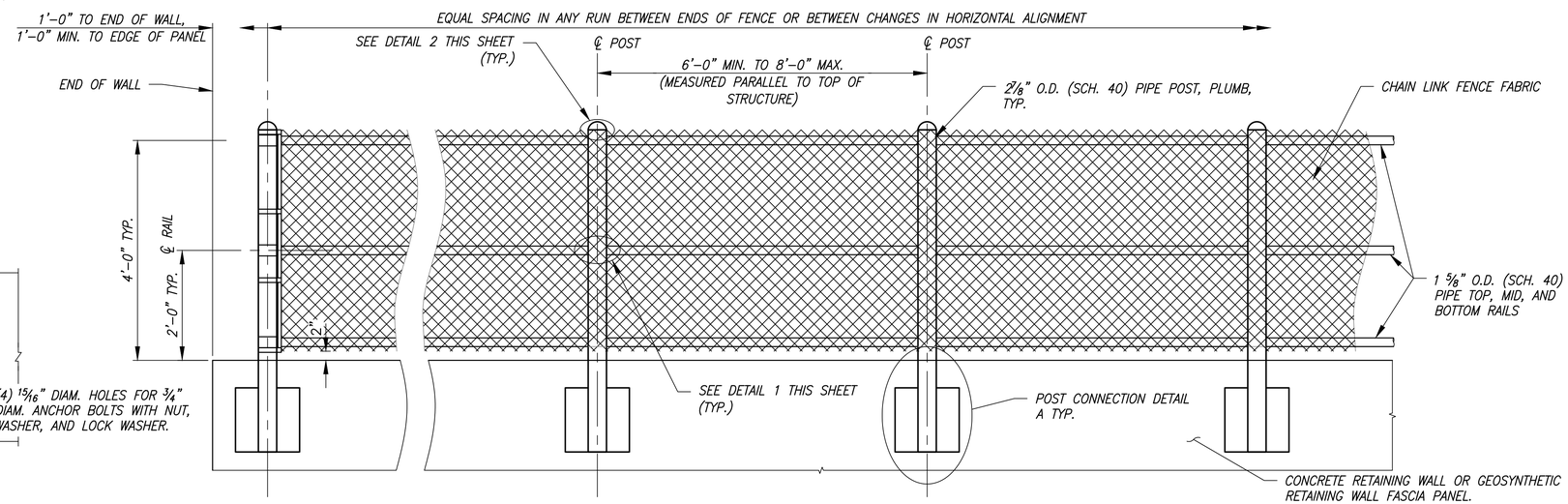

BRIDGE RAILING TYPE CHAIN LINK FENCE ELEVATION

SCALE: ¾" = 1'-0"

REVISIONS			
No.	BY	DATE	DESCRIPTION

SURVEYED: COUNTY
DESIGNED: MO
DRAWN: MO
CHECKED: RPD
CRP No. 2626
DATE: 08/28/24

Otak
11241 Willows Road NE, Suite 200
Redmond, WA 98052
425.822.4446
www.otak.com

STATE OF WASHINGTON ROBERT P. DOHERTY 43425 REGISTERED PROFESSIONAL ENGINEER
8/29/2024

KITSAP COUNTY 18 57 WASHINGTON

KITSAP COUNTY
DEPT. OF PUBLIC WORKS
614 DIVISION STREET MS-26
PORT ORCHARD, WA 98366
TEL:(360) 337-5777 FAX:(360) 337-4867

HARPER ESTUARY BARRIER CORRECTION

RETAINING WALL
SECTION AND DETAILS (3 OF 3)

KITSAP COUNTY, WASHINGTON
SECTION 2, TOWNSHIP 23 NORTH, RANGE 2 EAST, W.M.

SHEET W07
34 OF 55

Plotted: Aug 29, 2024 – 11:20am Matt.OConnell O:\PROJECT\32500\32510\Dwg\05_W05-W06.dwg Layout Name: W07

XREF LIST
Ltscale: 20
Resolved
TTBLK
C510B190
C510R270
C510R900
C510R510
T510X800

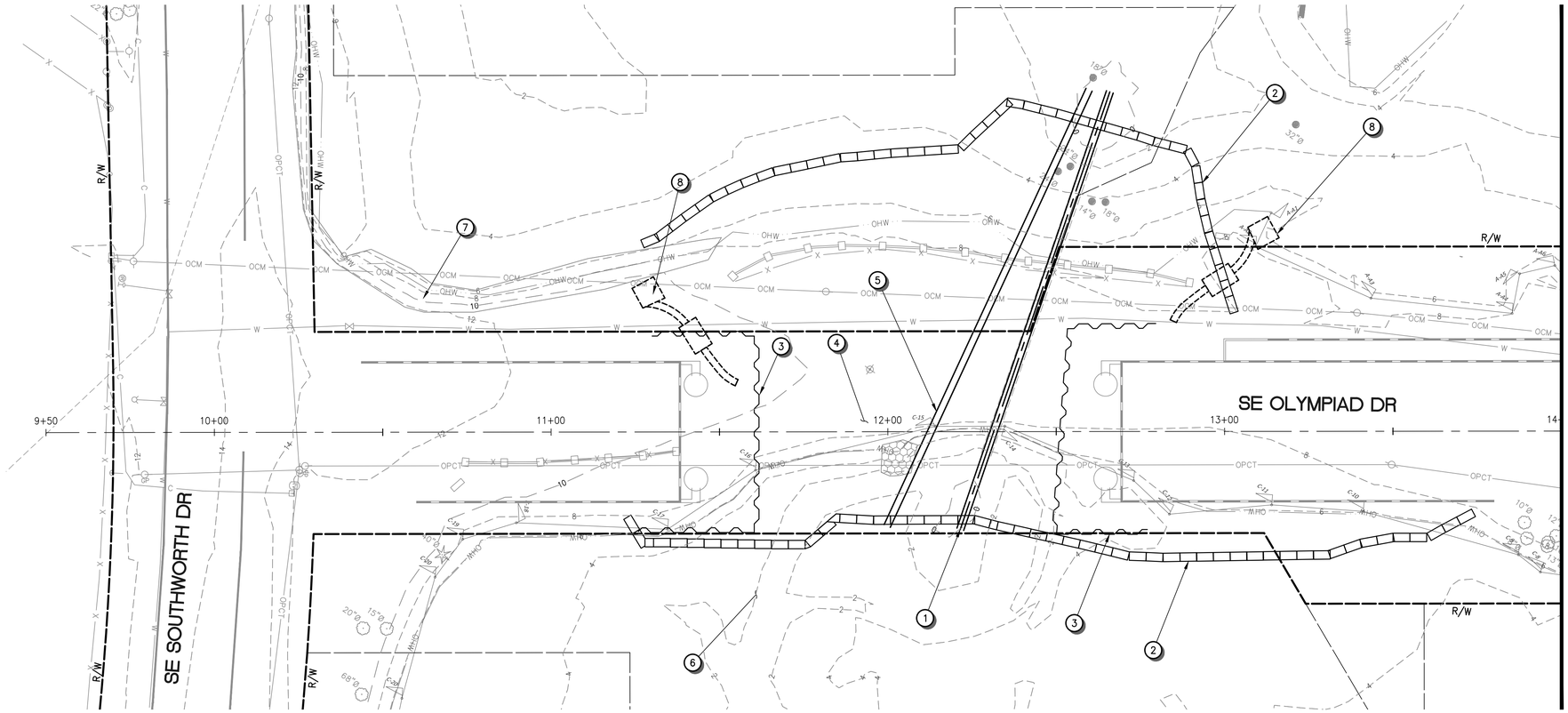

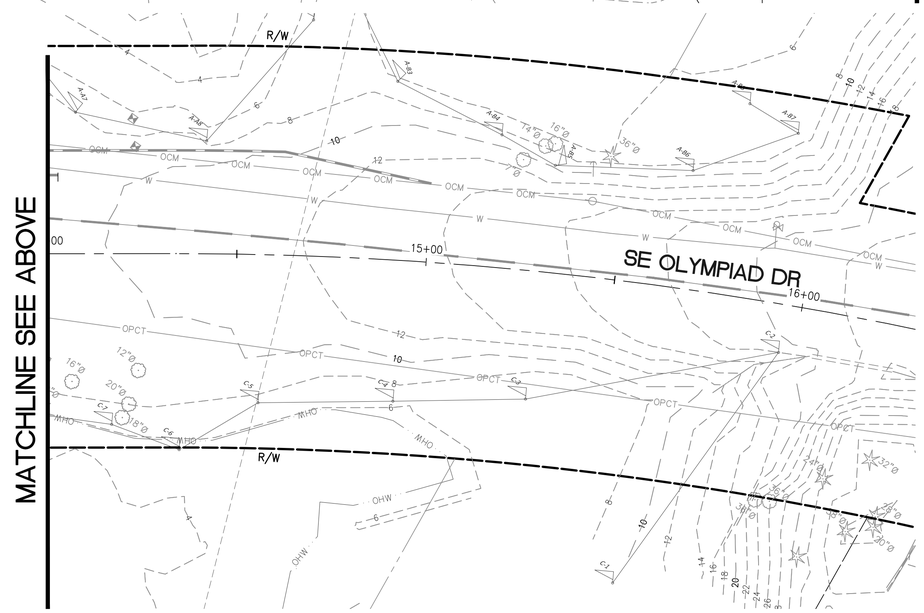

IN–WATER WORK TESC PLAN NOTES

1. INSTALL TEMPORARY STORM DRAIN PIPE THROUGH EXISTING 36" CONC. CULVERT TO THE APPROXIMATE LOCATION SHOWN.
2. CONSTRUCT TEMPORARY ISOLATION SYSTEM. LOCATION SHOWN IS APPROXIMATE, CONTRACTOR SHALL FIELD LOCATE TO ACCOMMODATE SITE CONDITIONS. ADDITIONAL STAGES MAY BE NEEDED. SEE DETAIL ON SHEET CR05 FOR SUGGESTED TEMPORARY ISOLATION BERM.
3. INSTALL SHEETPILE COFFERDAM. LOCATION SHOWN IS APPROXIMATE, CONTRACTOR SHALL FIELD LOCATE TO ACCOMMODATE SITE CONDITIONS AND WORK SEQUENCE.
4. EXCAVATE CHANNEL WITH EXISTING PIPE IN PLACE.
5. INSTALL TEMPORARY DIVERSION PIPE FOR REMOVAL OF EXISTING 36" CONC. PIPE.
6. EXCAVATE CHANNEL UPSTREAM OF TEMPORARY ISOLATION AND BYPASS SYSTEM DURING LOW TIDES.
7. PLACE SHORELINE SLOPE PROTECTION BELOW OHW PER SHEET CR02 DURING LOW TIDES.
8. PROVIDE TEMPORARY PUMP SYSTEM FOR DEWATERING AS NEEDED, APPROXIMATE LOCATION SHOWN. DISCHARGE TO SEDIMENT FILTER BAG OR OTHER APPROVED TESC MEASURE. SEE SPECIFICATIONS FOR DEWATERING REQUIREMENTS

IN–WATER WORK TESC PLAN GENERAL NOTES

1. THE CONTRACTOR SHALL SUBMIT THE TEMPORARY BYPASS AND ISOLATION SYSTEM PLAN TO THE ENGINEER FOR REVIEW AND APPROVAL. THE TEMPORARY BYPASS SYSTEM AND ISOLATION BERM SHOWN ON PLAN IS SUGGESTED ONLY.
2. THE TEMPORARY BYPASS AND ISOLATION SYSTEM PLAN SHALL MEET ALL PERMIT REQUIREMENTS.
3. FISH EXCLUSION AND FISH REMOVAL SHALL BE PERFORMED DURING IN–WATER WINDOW IN ACCORDANCE WITH THE WASHINGTON DEPARTMENT OF FISH AND WILDLIFE HPA.

LEGEND

ISOLATION BERM
COFFERDAM

HORZ SCALE 20' 0' 20' 40' IN FEET
VERT

REVISIONS			
No.	BY	DATE	DESCRIPTION

SURVEYED: COUNTY
DESIGNED: DAS
DRAWN: AK
CHECKED: GSL
CRP No. 2626
DATE: 08/28/24

Otak
11241 Willows Road NE, Suite 200
Redmond, WA 98052
425.822.4446
www.otak.com

LORI B. McFARLAND STATE OF WASHINGTON 31237 REGISTERED PROFESSIONAL ENGINEER 9/5/24

KITSAP COUNTY 18 57 WASHINGTON

KITSAP COUNTY
DEPT. OF PUBLIC WORKS
614 DIVISION STREET MS–26
PORT ORCHARD, WA 98366
TEL:(360) 337–5777 FAX:(360) 337–4867

HARPER ESTUARY BARRIER CORRECTION

HARPER CREEK
IN–WATER WORK TESC PLAN
KITSAP COUNTY, WASHINGTON
SECTION 2, TOWNSHIP 23 NORTH, RANGE 2 EAST, W.M.

SHEET CR01
35 OF 55

Plotted: Sep 04, 2024 – 5:09pm ahmed.kayanda O:\PROJECT\32500\32510\Dwg\06_CR01.dwg Layout Name: CR01

XREF LIST
Ltscale: 20
Resolved
TTBLK
C510R270
C510R900
T510X800
HARPER
C510R510
T510X370
C510G432
WDFW_PROPOSED
C510G461
C510U630
C510G275
C510W360
Unresolved
32510 CHNL GRDG
WDFW_HARPER BASE

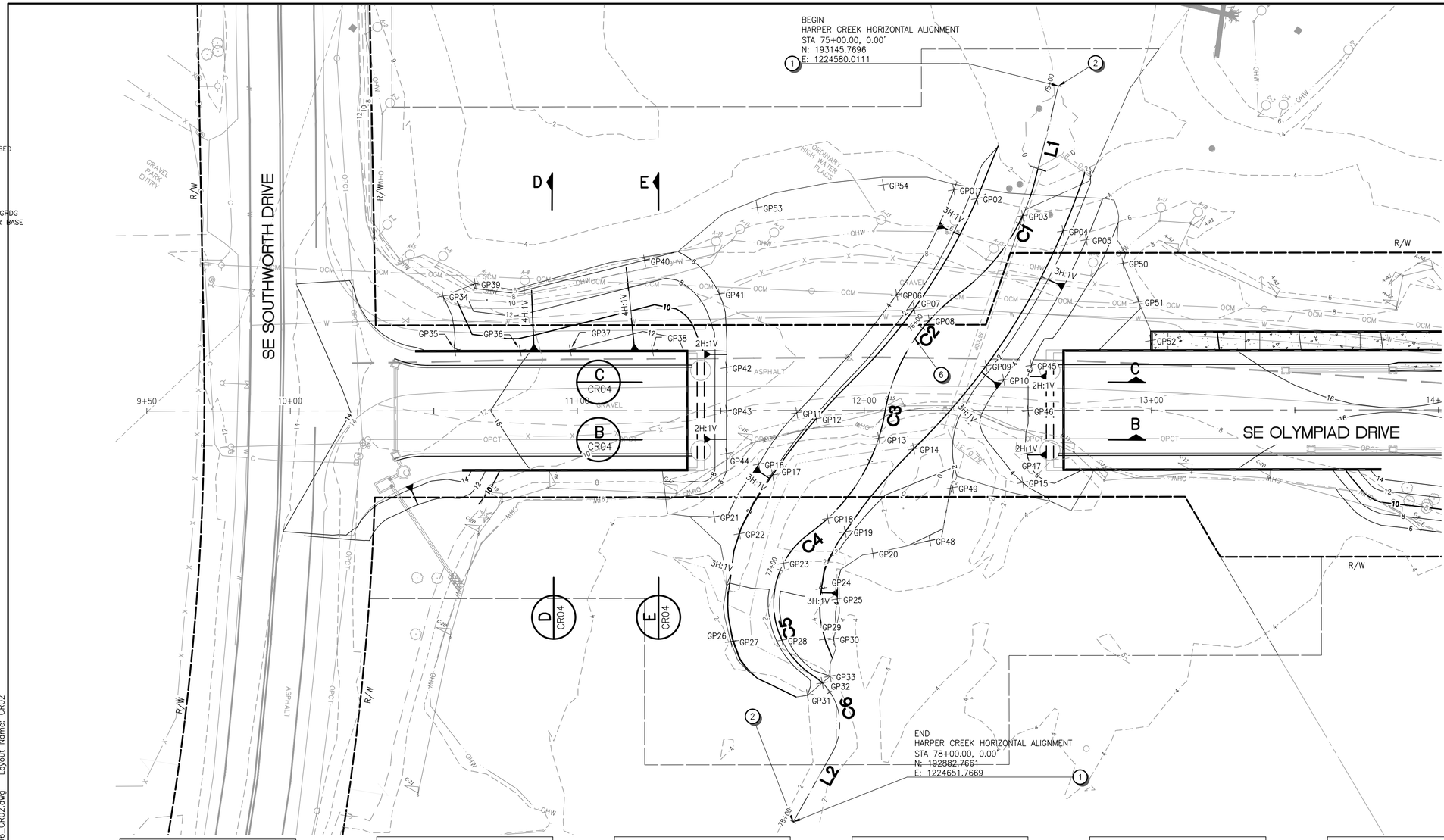

CREEK GRADING GENERAL NOTES

1. ELEVATIONS SHOWN ON GRADING PLAN ARE FINISHED GRADE. EXCAVATION WILL BE REQUIRED BELOW FINISHED GRADE TO PLACE STREAMBED SEDIMENT AND STREAMBED GRAVEL. SEE SHEET CR03 FOR HARPER CREEK STREAMBED STABILIZATION PLAN.

CREEK GRADING CONSTRUCTION NOTES

1. CONSTRUCTION CENTERLINE.
2. TRANSITION GRADING TO EXISTING CHANNEL.
3. INSTALL 12" OF STREAMBED GRAVEL, SEE SHEET CR03 FOR EXTENTS.
4. INSTALL 12" OF STREAMBED SEDIMENT, SEE SHEET CR03 FOR EXTENTS.
5. INSTALL IN-WATER WORK TESC, SEE SHEET CR01.
6. CONSTRUCT LOW FLOW CHANNEL PER DETAIL ON SHEET CR05.

HARPER CREEK HORIZONTAL ALIGNMENT TABLE

NUMBER	STATION	LENGTH	RADIUS	BEARING	DELTA
L1	75+00.00	33.78'		S21°08'43"E	
C1	75+33.78	48.78'	70.00'	S1°10'49"E	39°55'47"
C2	75+82.56	50.12'	65.00'	S3°18'11"E	44°10'31"
C3	76+32.68	50.68'	65.00'	S3°03'09"E	44°40'34"
C4	76+83.36	58.52'	30.00'	S36°35'54"E	111°46'03"
C5	76+83.36	58.52'	30.00'	S36°35'54"E	111°46'03"
C6	77+41.88	30.30'	20.00'	S49°04'57"E	86°47'57"
L2	77+72.18	27.82'		S5°40'58"E	

GRADING POINTS

POINT	NORTHING	EASTING	ELEV.
GP01	193095.2	1224571.0	4.0
GP02	193097.3	1224579.3	1.1
GP03	193101.6	1224595.8	0.1
GP04	193105.3	1224610.3	1.1
GP05	193107.5	1224618.7	4.0
GP06	193053.9	1224575.7	4.0
GP07	193053.4	1224583.4	1.4
GP08	193053.0	1224590.2	0.4
GP09	193051.4	1224615.4	1.4
GP10	193051.0	1224623.2	4.0

GRADING POINTS

POINT	NORTHING	EASTING	ELEV.
GP11	193000.2	1224570.8	4.0
GP12	193002.3	1224577.6	1.6
GP13	193009.4	1224599.3	0.6
GP14	193013.3	1224611.4	1.6
GP15	193025.5	1224649.2	4.0
GP16	192977.9	1224570.3	4.0
GP17	192977.6	1224576.4	1.9
GP18	192976.3	1224600.9	0.8
GP19	192975.9	1224608.5	1.8
GP20	192975.3	1224620.7	2.7

GRADING POINTS

POINT	NORTHING	EASTING	ELEV.
GP21	192954.0	1224568.1	4.0
GP22	192954.2	1224578.7	1.9
GP23	192954.6	1224597.2	1.0
GP24	192955.0	1224613.0	2.0
GP25	192955.2	1224619.7	4.0
GP26	192921.7	1224597.8	1.8
GP27	192922.3	1224598.6	2.1
GP28	192932.3	1224612.1	1.1
GP29	192941.3	1224624.2	2.2
GP30	192943.1	1224626.7	3.2

GRADING POINTS

POINT	NORTHING	EASTING	ELEV.
GP31	192921.7	1224630.5	2.0
GP32	192928.2	1224632.2	1.2
GP33	192931.7	1224633.1	2.0
GP34	192962.6	1224446.6	12.0
GP35	192949.5	1224460.8	12.3
GP36	192962.6	1224479.5	12.2
GP37	192972.6	1224493.8	12.0
GP38	192989.1	1224517.2	13.2
GP39	192972.5	1224453.3	5.6
GP40	193013.0	1224497.0	6.0

GRADING POINTS

POINT	NORTHING	EASTING	ELEV.
GP41	193018.5	1224525.0	6.0
GP42	192999.0	1224541.7	6.0
GP43	192986.7	1224550.4	6.0
GP44	192974.4	1224559.0	6.0
GP45	193060.7	1224628.2	6.0
GP46	193047.1	1224636.4	6.0
GP47	193034.7	1224644.6	6.0
GP48	192990.3	1224634.4	2.0
GP49	193010.0	1224630.3	2.0
GP50	193108.1	1224633.9	7.7

GRADING POINTS

POINT	NORTHING	EASTING	ELEV.
GP51	193100.2	1224646.1	8.0
GP52	193091.6	1224657.3	8.5
GP53	193050.8	1224518.4	5.1
GP54	193082.5	1224549.9	4.8

HORZ SCALE 20' 0' 20' 40' IN FEET
VERT

REVISIONS

No.	BY	DATE	DESCRIPTION

SURVEYED: COUNTY
DESIGNED: DAS
DRAWN: SNG
CHECKED: GSL
CRP No. 2626
DATE: 08/28/24

Otak
11241 Willows Road NE, Suite 200
Redmond, WA 98052
425.822.4446
www.otak.com

LORAN B. McFARLAND STATE OF WASHINGTON 31237 REGISTERED PROFESSIONAL ENGINEER 9/5/24

KITSAP COUNTY
DEPT. OF PUBLIC WORKS
614 DIVISION STREET MS-26
PORT ORCHARD, WA 98366
TEL:(360) 337-5777 FAX:(360) 337-4867

HARPER ESTUARY BARRIER CORRECTION

HARPER CREEK
GRADING PLAN
KITSAP COUNTY, WASHINGTON
SECTION 2, TOWNSHIP 23 NORTH, RANGE 2 EAST, W.M.

Plotted: Sep 04, 2024 – 5:09pm ahmed.kayanda O:\PROJECT\32500\32510\Dwg\06_CR02.dwg Layout Name: CR02

XREF LIST
Ltscale: 20
Resolved
TTBLK
C510R270
C510R900
T510X800
HARPER
C510R510
T510X370
C510G432
WDFW_PROPOSED
C510G461
C510U630
C510G275
C510W360
Unresolved
32510 CHNL GRDG
WDFW_HARPER BASE

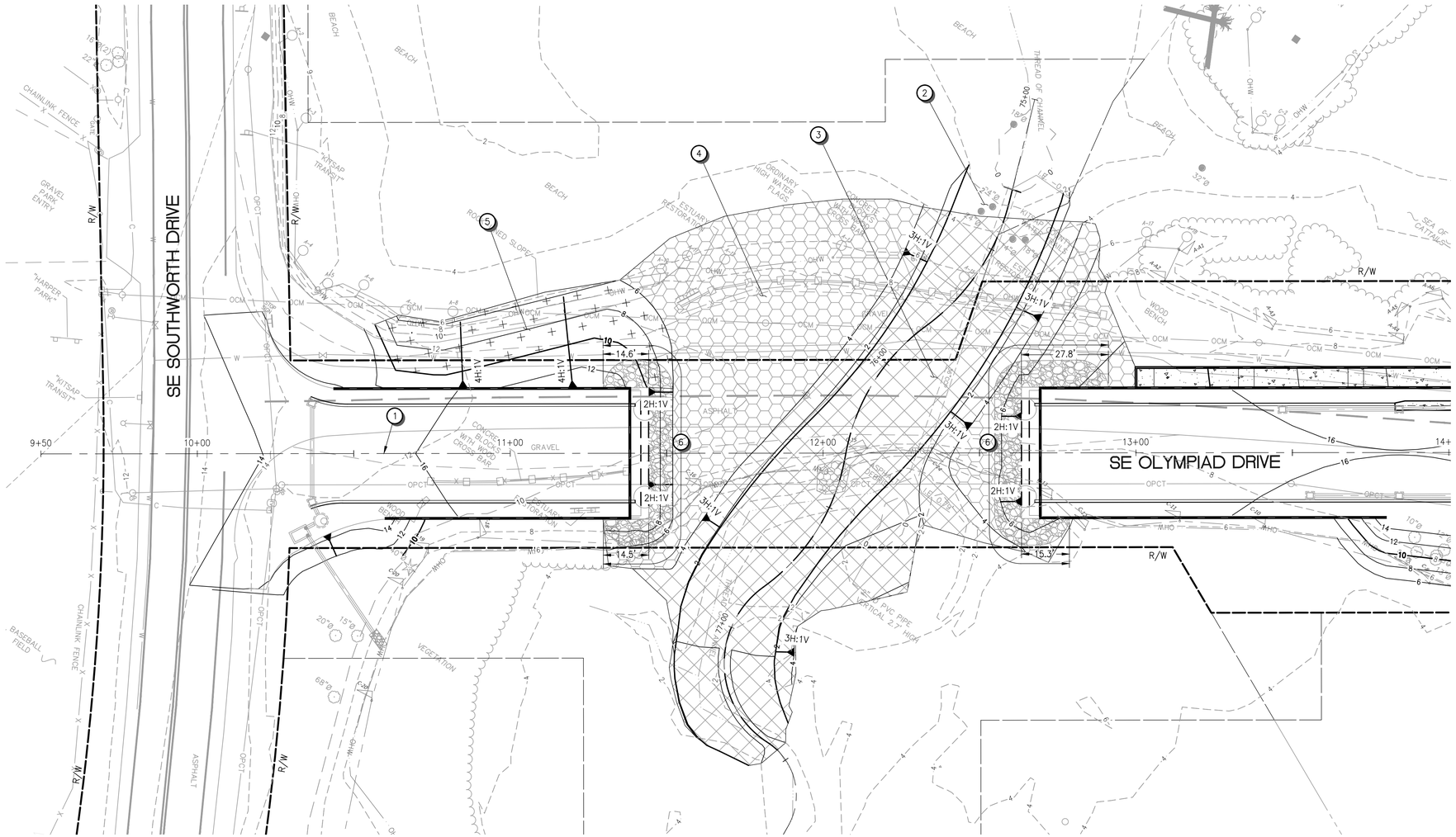

STREAMBED STABILIZATION CONSTRUCTION NOTES

1. CONSTRUCTION CENTERLINE, SEE DWG RW01 FOR DETAILS.
2. NO ADDITIONAL EXCAVATION FOR PLACEMENT OF STREAMBED GRAVEL OR SEDIMENT REQUIRED.
3. INSTALL 12" OF STREAMBED GRAVEL. TOP OF GRAVEL SHALL MATCH FINISHED GRADE ELEVATIONS.
4. INSTALL 12" OF STREAMBED SEDIMENT. TOP OF SEDIMENT SHALL MATCH FINISHED GRADE ELEVATIONS.
5. CONSTRUCT SHORELINE SLOPE PROTECTION PER DETAIL ON SHEET CR04.
6. CONSTRUCT RIPRAP TOE TRENCH PER DETAIL ON SHEET CR04. STREAMBED SEDIMENT IS NOT SHOWN ABOVE RIPRAP TRENCH AREAS FOR CLARITY. STREAMBED SEDIMENT IS REQUIRED ABOVE RIPRAP TRENCH AREAS.

STREAMBED STABILIZATION GENERAL NOTES

1. EXCAVATION IS REQUIRED BELOW FINISHED GRADE FOR REPLACEMENT OF STREAMBED MATERIALS, UNLESS OTHERWISE NOTED.

LEGEND

- STREAMBED SEDIMENT
- STREAMBED GRAVEL
- RIPRAP TOE TRENCH (BURIED)
- SHORELINE SLOPE PROTECTION

HORZ SCALE 20' 0' 20' 40' IN FEET
VERT

REVISIONS			
No.	BY	DATE	DESCRIPTION

SURVEYED: COUNTY
DESIGNED: DAS
DRAWN: SNG
CHECKED: GSL
CRP No. 2626
DATE: 08/28/24

Otak
11241 Willows Road NE, Suite 200
Redmond, WA 98052
425.822.4446
www.otak.com

LORI B. McFARLAND STATE OF WASHINGTON 31237 REGISTERED PROFESSIONAL ENGINEER 9/5/24

KITSAP COUNTY 18 57 WASHINGTON

KITSAP COUNTY
DEPT. OF PUBLIC WORKS
614 DIVISION STREET MS-26
PORT ORCHARD, WA 98366
TEL:(360) 337-5777 FAX:(360) 337-4867

HARPER ESTUARY BARRIER CORRECTION

HARPER CREEK
STREAMBED STABILIZATION PLAN
KITSAP COUNTY, WASHINGTON
SECTION 2, TOWNSHIP 23 NORTH, RANGE 2 EAST, W.M.

SHEET CR03
37 OF 55

Plotted: Sep 04, 2024 – 5:10pm ahmed.kayanda O:\PROJECT\32500\32510\Dwg\06_CR03.dwg Layout Name: CR03

XREF LIST
Ltscale: 20
Resolved
TTBLK
C510B190
C510R270
C510R900
C510R510
T510X800

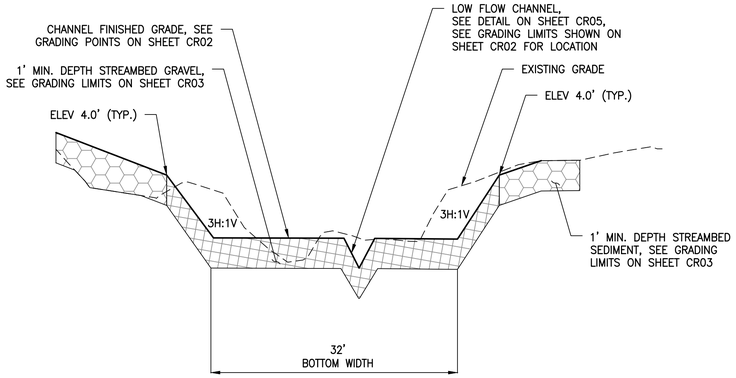

TYPICAL CHANNEL SECTION

NOT TO SCALE

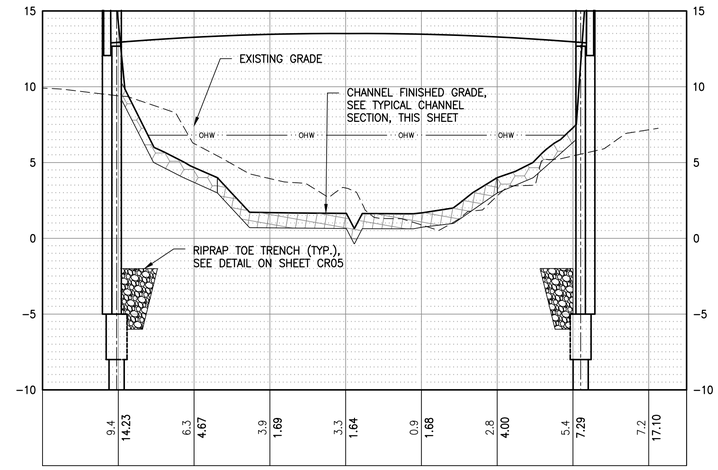

B CR02 HARPER CREEK GRADING SECTION

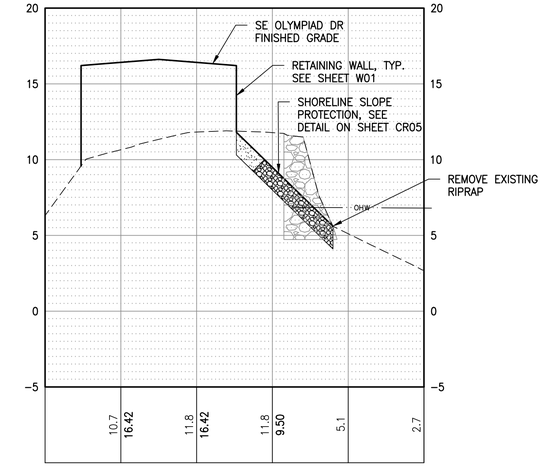

D CR02 SHORELINE SLOPE PROTECTION SECTION

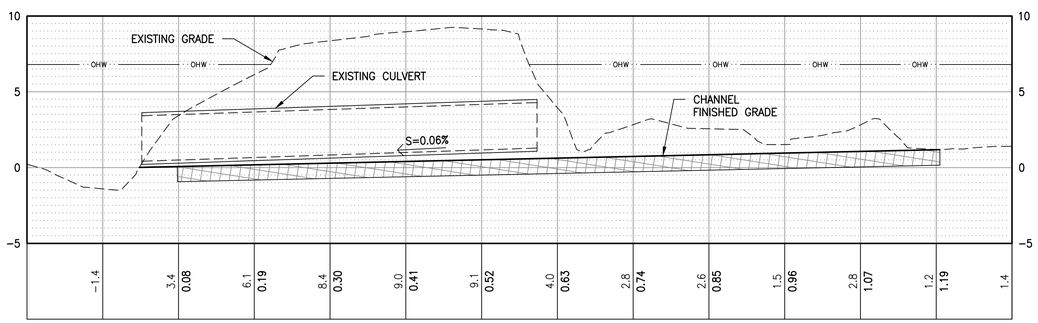

NOTES:

1. EXISTING CULVERT SHOWN FOR REFERENCE ONLY. EXISTING CULVERT DOES NOT FOLLOW CHANNEL ALIGNMENT.

HARPER CREEK LOW FLOW CHANNEL PROFILE

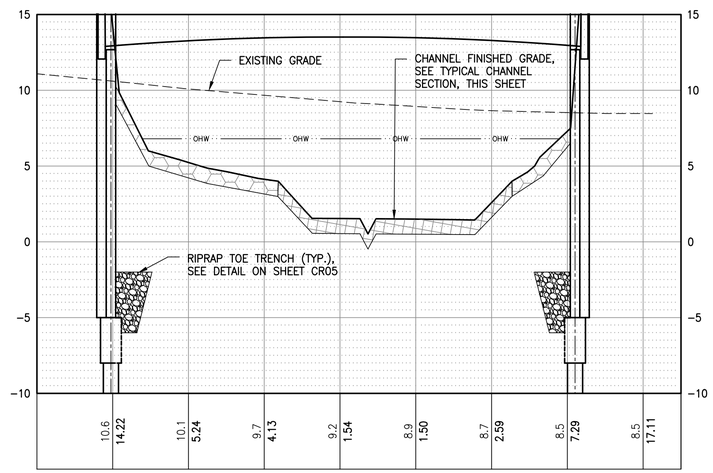

C CR02 HARPER CREEK GRADING SECTION

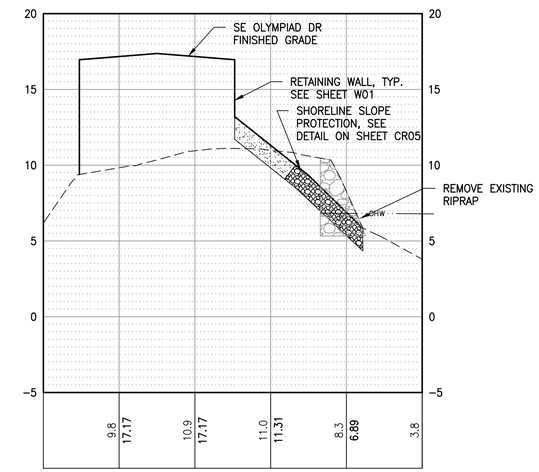

E CR02 SHORELINE SLOPE PROTECTION SECTION

HORZ SCALE 20' 0' 20' 40' IN FEET
VERT SCALE 5' 0' 5' 10' IN FEET

REVISIONS			
No.	BY	DATE	DESCRIPTION

SURVEYED: COUNTY
DESIGNED: DAS
DRAWN: SNG
CHECKED: GSL
CRP No. 2626
DATE: 08/28/24

Otak
11241 Willows Road NE, Suite 200
Redmond, WA 98052
425.822.4446
www.otak.com

LORI B. McFARLAND STATE OF WASHINGTON 31237 REGISTERED PROFESSIONAL ENGINEER
9/5/24

KITSAP COUNTY 18 57 WASHINGTON

KITSAP COUNTY
DEPT. OF PUBLIC WORKS
614 DIVISION STREET MS-26
PORT ORCHARD, WA 98366
TEL:(360) 337-5777 FAX:(360) 337-4867

HARPER ESTUARY BARRIER CORRECTION

HARPER CREEK GRADING SECTIONS

KITSAP COUNTY, WASHINGTON
SECTION 2, TOWNSHIP 23 NORTH, RANGE 2 EAST, W.M.

SHEET CR04
38 OF 55

Plotted: Aug 28, 2024 - 12:03pm evo.ho O:\PROJECT\32500\32510\Dwg\06_CR04.dwg Layout Name: CR04

XREF LIST
Ltscale: 20
Resolved
TTBLK
C510B190
C510R270
C510R900
C510R510
T510X800

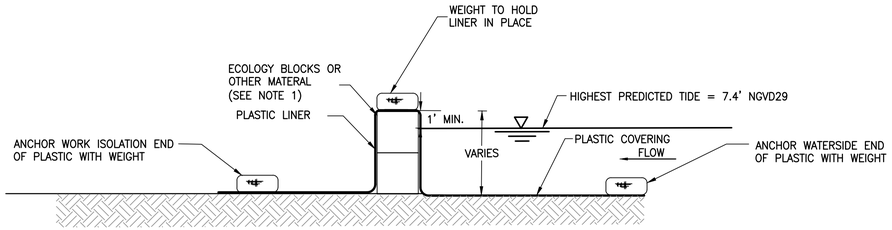

SIDE VIEW

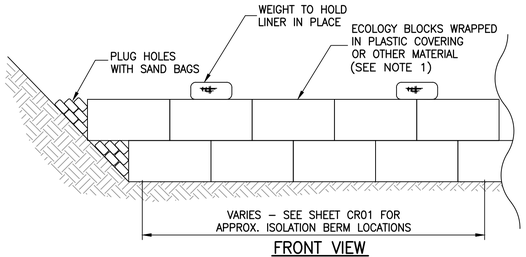

FRONT VIEW

TEMPORARY ISOLATION BERM

NOT TO SCALE

CONSTRUCTION SEQUENCE

1. INSTALL ISOLATION BERMS USING ECOLOGY BLOCKS, GRAVEL BAGS, WATER–FILLED BLADDERS, OR OTHER APPROVED MATERIALS. CONTRACTOR TO PROPOSE METHOD AND MATERIALS FOR APPROVAL PRIOR TO CONSTRUCTION.
2. EXCAVATE TO FINAL GRADE
3. INSTALL STREAMBED GRAVEL
4. REMOVE ISOLATION BERM

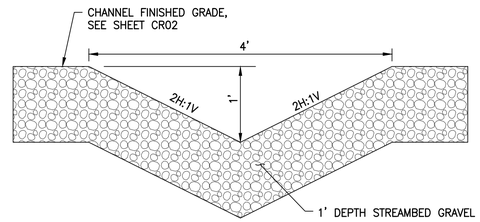

LOW FLOW CHANNEL

NOT TO SCALE

% BY VOLUME	MATERIAL
75%	STREAMBED SEDIMENT (WSDOT 9–03.11(1))
25%	4–INCH STREAMBED COBBLES (WSDOT 9–03.11(4))

STREAMBED GRAVEL GRADATION

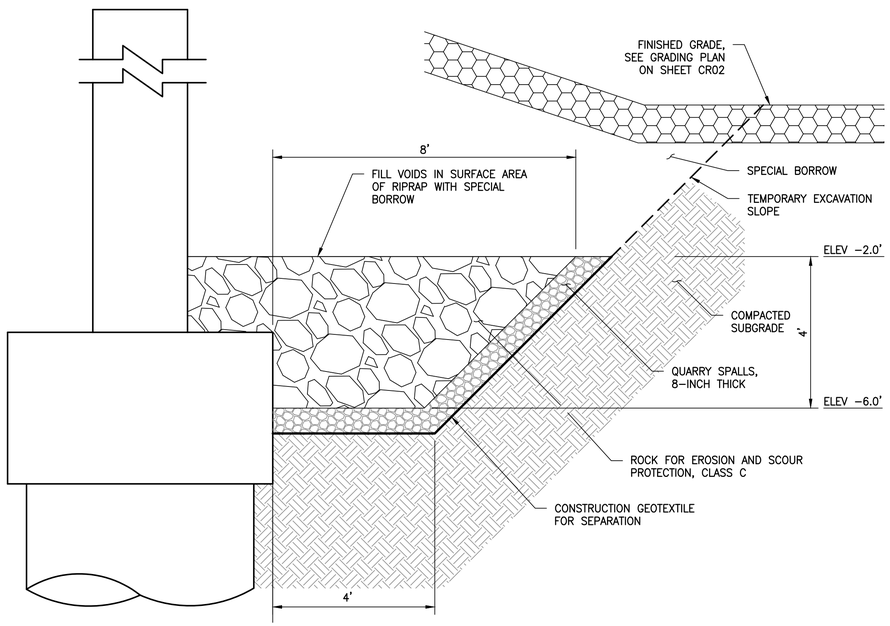

RIPRAP TOE TRENCH

NOT TO SCALE

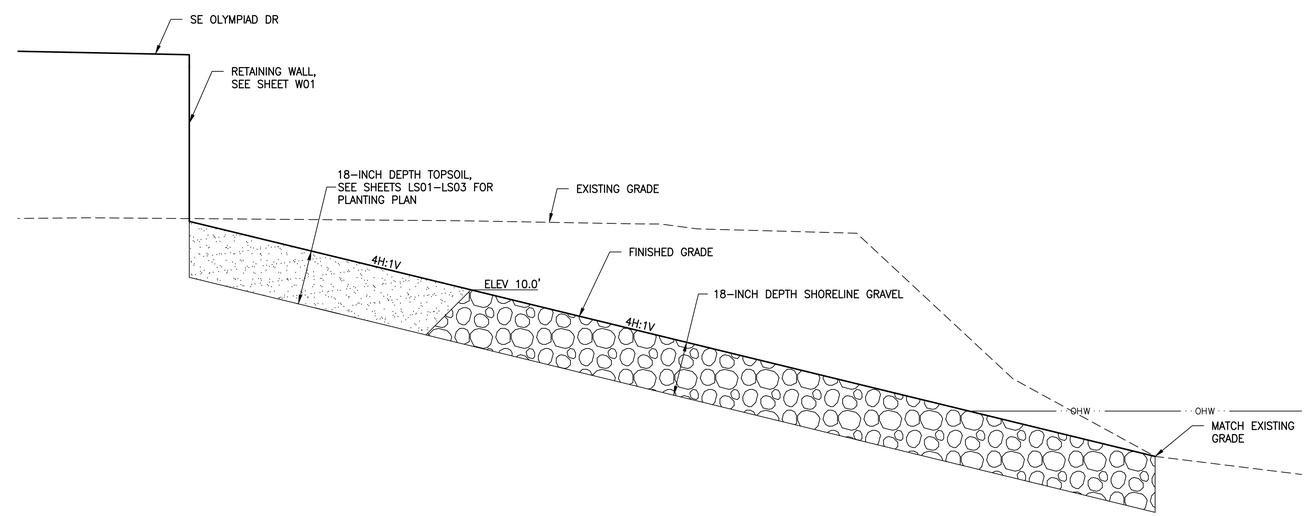

SHORELINE SLOPE PROTECTION

NOT TO SCALE

REVISIONS			
No.	BY	DATE	DESCRIPTION

SURVEYED: COUNTY
DESIGNED: DAS
DRAWN: AK
CHECKED: GSL
CRP No. 2626
DATE: 08/28/24

Otak
11241 Willows Road NE, Suite 200
Redmond, WA 98052
425.822.4446
www.otak.com

LORI B. McFARLAND
STATE OF WASHINGTON
31237
REGISTERED PROFESSIONAL ENGINEER
9/5/24

KITSAP COUNTY 1857 WASHINGTON
KITSAP COUNTY
DEPT. OF PUBLIC WORKS
614 DIVISION STREET MS–26
PORT ORCHARD, WA 98366
TEL:(360) 337–5777 FAX:(360) 337–4867

HARPER ESTUARY BARRIER CORRECTION

HARPER CREEK
GRADING DETAILS

KITSAP COUNTY, WASHINGTON
SECTION 2, TOWNSHIP 23 NORTH, RANGE 2 EAST, W.M.

Plotted: Aug 28, 2024 – 12:04pm evo.ho O:\PROJECT\32500\32510\Dwg\06_CR05.dwg Layout Name: CR05

XREF LIST
Ltscale: 1
Resolved
TTBLK
C510R270
C510R900
T510X800
HARPER
C510N030
T510X370
C510G430
C510U690
C510R510
T510X900
WDFW_PROPOSED
C510G420
C510W360
C510U630

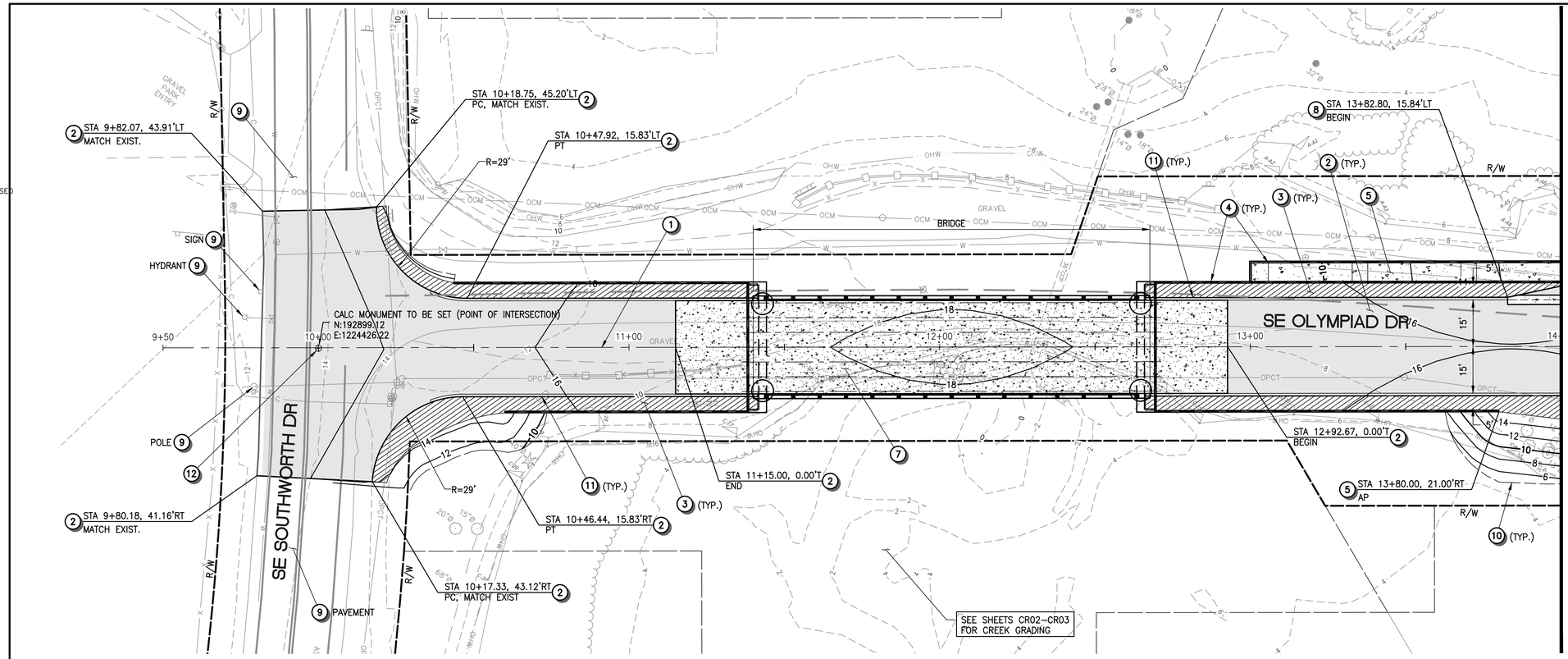

ROADWAY CONSTRUCTION NOTES

1. CONSTRUCTION CENTERLINE, SEE DWG RW01 FOR DETAILS.
2. CONSTRUCT ASPHALT CONCRETE PAVEMENT PER ROADWAY SECTION ON DWG RD04, LIMITS PER PLAN.
3. INSTALL GRAVEL SHOULDER PER ROADWAY SECTION ON DWG RD04, LIMITS PER PLAN.
4. RETAINING WALL, SEE WALL PLANS (DWG W01–W06) FOR DETAILS.
5. CONSTRUCT PEDESTRIAN PATH CEMENT CONCRETE PAVEMENT, PER DETAIL ON DWG RD03 AND RD04, LIMITS PER PLAN.
6. RECONSTRUCT DRIVEWAY PER DRIVEWAY SECTION ON DWG RD04. SEE DWG RD05 FOR LAYOUT.
7. BRIDGE, SEE BRIDGE PLANS (DWG B01) FOR DETAILS.
8. CONSTRUCT CEMENT CONC. VALLEY GUTTER PER DETAIL ON DWG RD04.
9. EXISTING FEATURES OR STRUCTURES TO REMAIN, PROTECT DURING CONSTRUCTION.
10. APPROX. GRADING LIMITS.
11. EXTRUDED CURB, SEE CH01 FOR LAYOUT.
12. INSTALL CASED MONUMENTS PER DETAIL ON DWG RD04. COORDINATE WITH KITSAP COUNTY SURVEYOR TO VERIFY THE LOCATION PRIOR TO INSTALLATION.

ROADWAY GENERAL NOTES

1. ALL DIMENSIONS, STATION AND OFFSET REFERENCES ARE TO FACE OF CURB UNLESS NOTED OTHERWISE.

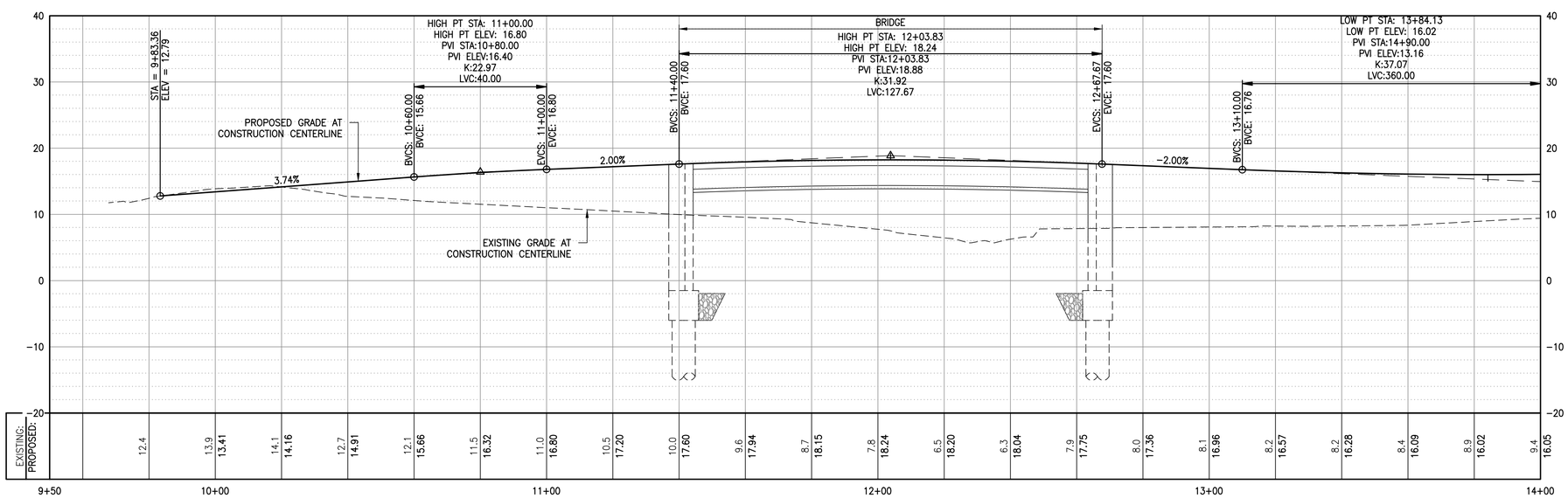

LEGEND

- ASPHALT CONCRETE PAVEMENT
- CEMENT CONCRETE PAVEMENT
- GRAVEL SHOULDER
- RETAINING WALL

HORZ SCALE 20' 0' 20' 40' IN FEET

VERT SCALE 10' 0' 10' 20' IN FEET

REVISIONS			
No.	BY	DATE	DESCRIPTION

SURVEYED: COUNTY
DESIGNED: EH
DRAWN: AK
CHECKED: TP
CRP No. 2626
DATE: 08/28/24

Otak
11241 Willows Road NE, Suite 200
Redmond, WA 98052
425.822.4446
www.otak.com

YI HUA HO — STATE OF WASHINGTON — 52003 — REGISTERED PROFESSIONAL ENGINEER — 8/28/2024

KITSAP COUNTY 18 57 WASHINGTON

KITSAP COUNTY
DEPT. OF PUBLIC WORKS
614 DIVISION STREET MS–26
PORT ORCHARD, WA 98366
TEL:(360) 337–5777 FAX:(360) 337–4867

HARPER ESTUARY BARRIER CORRECTION

ROADWAY
PLAN AND PROFILE
KITSAP COUNTY, WASHINGTON
SECTION 2, TOWNSHIP 23 NORTH, RANGE 2 EAST, W.M.

SHEET RD01
40 OF 55

Plotted: Aug 28, 2024 – 12:04pm evo.ho O:\PROJECT\32500\32510\Dwg\08_RD01–RD02.dwg Layout Name: RD01

XREF LIST
Ltscale: 1
Resolved
TTBLK
C510R270
C510R900
T510X800
HARPER
C510N030
T510X370
C510G430
C510U690
C510R510
T510X900
WDFW_PROPOSED
C510G420
Unresolved
C510U630

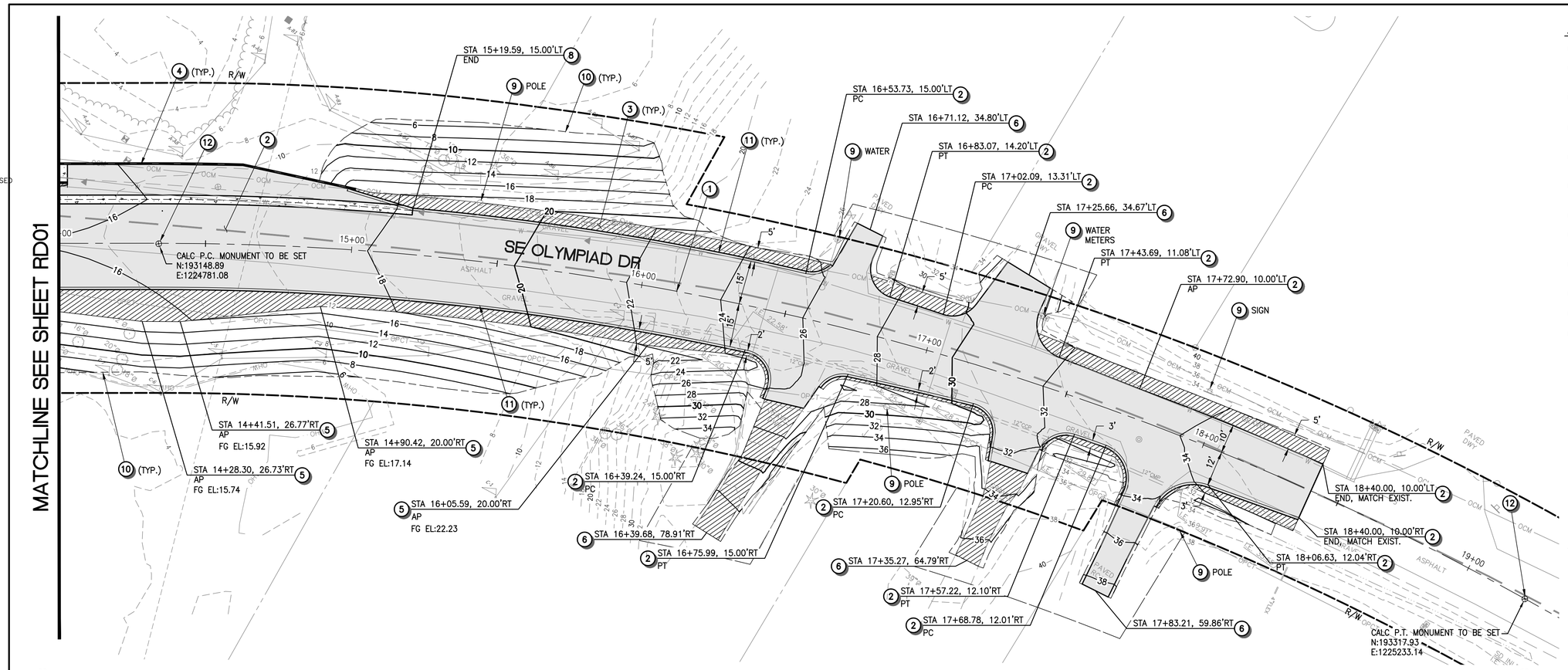

ROADWAY CONSTRUCTION NOTES

1. CONSTRUCTION CENTERLINE, SEE DWG RW01 FOR DETAILS.
2. CONSTRUCT ASPHALT CONCRETE PAVEMENT PER ROADWAY SECTION ON DWG RD04, LIMITS PER PLAN.
3. INSTALL GRAVEL SHOULDER PER ROADWAY SECTION ON DWG RD04, LIMITS PER PLAN.
4. RETAINING WALL, SEE WALL PLANS (DWG W01–W06) FOR DETAILS.
5. CONSTRUCT PEDESTRIAN PATH CEMENT CONCRETE PAVEMENT, PER DETAIL ON DWG RD03 AND RD04, LIMITS PER PLAN.
6. RECONSTRUCT DRIVEWAY PER DRIVEWAY SECTION ON DWG RD04. SEE DWG RD05 FOR LAYOUT.
7. BRIDGE, SEE BRIDGE PLANS (DWG B01) FOR DETAILS.
8. CONSTRUCT CEMENT CONC. VALLEY GUTTER PER DETAIL ON DWG RD04.
9. EXISTING FEATURES OR STRUCTURES TO REMAIN, PROTECT DURING CONSTRUCTION.
10. APPROX. GRADING LIMITS.
11. EXTRUDED CURB, SEE CH01 FOR LAYOUT.
12. INSTALL CASED MONUMENTS PER DETAIL ON DWG RD04. COORDINATE WITH KITSAP COUNTY SURVEYOR TO VERIFY THE LOCATION PRIOR TO INSTALLATION.

ROADWAY GENERAL NOTES

1. ALL DIMENSIONS, STATION AND OFFSET REFERENCES ARE TO FACE OF CURB UNLESS NOTED OTHERWISE.

LEGEND

- ASPHALT CONCRETE PAVEMENT
- CEMENT CONCRETE PAVEMENT
- GRAVEL SHOULDER
- RETAINING WALL

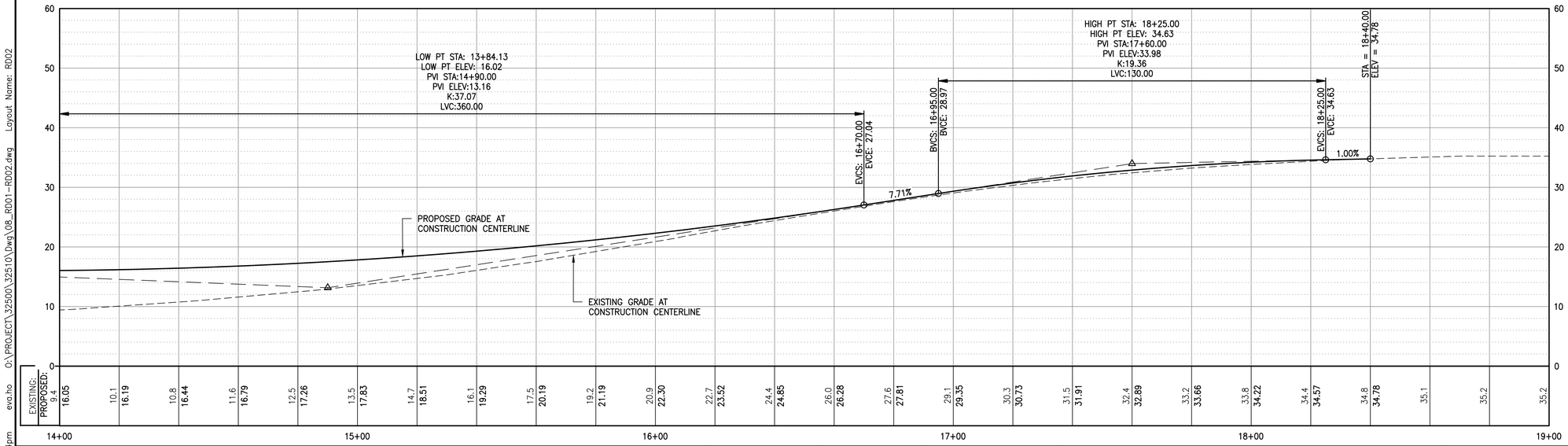

HORZ SCALE 20' 0' 20' 40' IN FEET

VERT SCALE 10' 0' 10' 20' IN FEET

REVISIONS			
No.	BY	DATE	DESCRIPTION

SURVEYED: COUNTY
DESIGNED: EH
DRAWN: AK
CHECKED: TP
CRP No. 2626
DATE: 08/28/24

Otak
11241 Willows Road NE, Suite 200
Redmond, WA 98052
425.822.4446
www.otak.com

YI HUAN HO — STATE OF WASHINGTON — 52003 — REGISTERED PROFESSIONAL ENGINEER — 8/28/2024

KITSAP COUNTY 18 57 WASHINGTON
KITSAP COUNTY
DEPT. OF PUBLIC WORKS
614 DIVISION STREET MS–26
PORT ORCHARD, WA 98366
TEL:(360) 337–5777 FAX:(360) 337–4867

HARPER ESTUARY BARRIER CORRECTION

ROADWAY PLAN AND PROFILE

KITSAP COUNTY, WASHINGTON
SECTION 2, TOWNSHIP 23 NORTH, RANGE 2 EAST, W.M.

O:\PROJECT\32500\32510\Dwg\08_RD01-RD02.dwg Layout Name: RD02 eva.ho Plotted: Aug 28, 2024 – 12:04pm

XREF LIST
Ltscale: 1
Resolved
TTBLK
C510R270
T510X800
HARPER
C510N030
T510X370
C510U690
C510G432
WDFW_PROPOSED
C510W360
C510R510
C510U630
C510R901
C510G420
Unresolved
C510G430

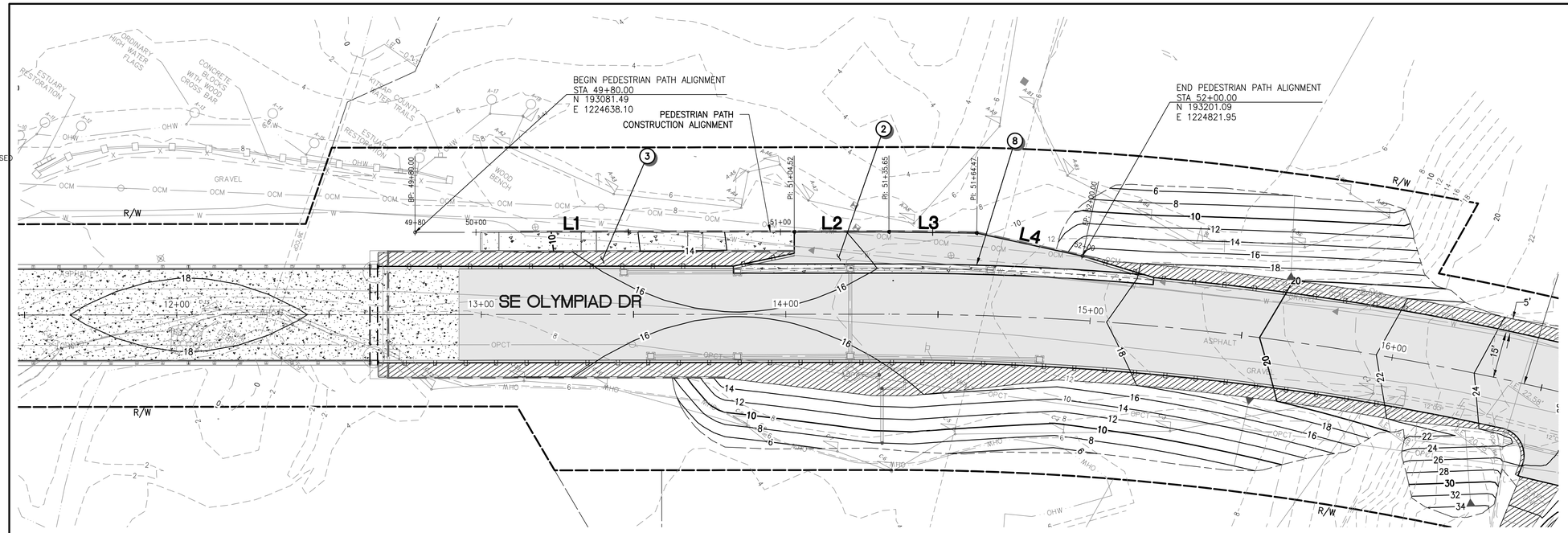

ROADWAY CONSTRUCTION NOTES

1. CONSTRUCTION CENTERLINE, SEE DWG RW01 FOR DETAILS.
2. CONSTRUCT ASPHALT CONCRETE PAVEMENT PER ROADWAY SECTION ON DWG RD04, LIMITS PER PLAN.
3. INSTALL GRAVEL SHOULDER PER ROADWAY SECTION ON DWG RD04, LIMITS PER PLAN.
4. RETAINING WALL, SEE WALL PLANS (DWG W01–W06) FOR DETAILS.
5. CONSTRUCT PEDESTRIAN PATH CEMENT CONCRETE PAVEMENT, PER DETAIL ON DWG RD03 AND RD04, LIMITS PER PLAN.
6. RECONSTRUCT DRIVEWAY PER DRIVEWAY SECTION ON DWG RD04. SEE DWG RD05 FOR LAYOUT.
7. BRIDGE, SEE BRIDGE PLANS (DWG B01) FOR DETAILS.
8. CONSTRUCT CEMENT CONC. VALLEY GUTTER PER DETAIL ON DWG RD04.
9. EXISTING FEATURES OR STRUCTURES TO REMAIN, PROTECT DURING CONSTRUCTION.
10. APPROX. GRADING LIMITS.
11. EXTRUDED CURB, SEE CH01 FOR LAYOUT.
12. INSTALL CASED MONUMENTS PER DETAIL ON DWG RD04. COORDINATE WITH KITSAP COUNTY SURVEYOR TO VERIFY THE LOCATION PRIOR TO INSTALLATION.

PEDESTRIAN PATH ALIGNMENT TABLE

NUMBER	STATION	LENGTH	RADIUS	BEARING	DELTA
L1	49+80.00	124.52'		N54°51'54"E	
L2	51+04.52	31.13'		N54°51'54"E	
L3	51+35.65	28.82'		N55°41'19"E	
L4	51+64.47	35.53'		N67°10'12"E	

ROADWAY GENERAL NOTES

1. ALL DIMENSIONS, STATION AND OFFSET REFERENCES ARE TO FACE OF CURB UNLESS NOTED OTHERWISE.

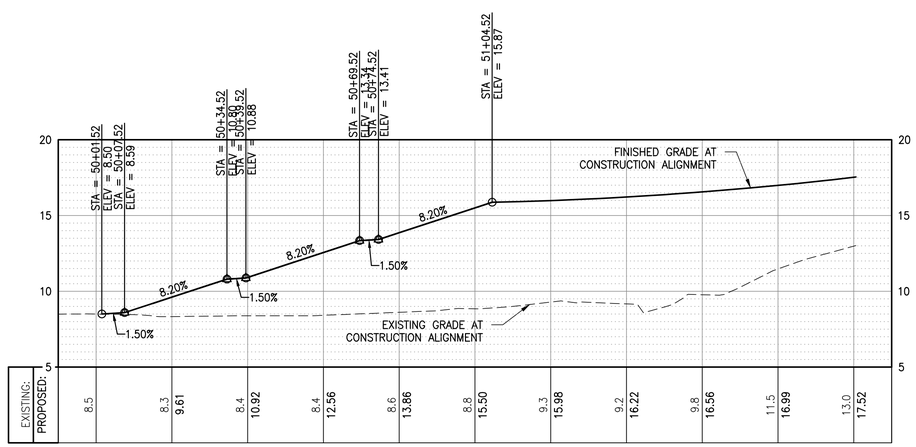

LEGEND

- ASPHALT CONCRETE PAVEMENT
- CEMENT CONCRETE PAVEMENT
- GRAVEL SHOULDER
- RETAINING WALL

HORZ SCALE 20' 0' 20' 40' IN FEET
VERT SCALE 5' 0' 5' 10' IN FEET

REVISIONS			
No.	BY	DATE	DESCRIPTION

SURVEYED: COUNTY
DESIGNED: DAS
DRAWN: AK
CHECKED: GSL
CRP No. 2626
DATE: 08/28/24

Otak
11241 Willows Road NE, Suite 200
Redmond, WA 98052
425.822.4446
www.otak.com

YI HUA HO
STATE OF WASHINGTON
52003
REGISTERED
PROFESSIONAL ENGINEER
8/28/2024

KITSAP COUNTY
DEPT. OF PUBLIC WORKS
614 DIVISION STREET MS-26
PORT ORCHARD, WA 98366
TEL:(360) 337-5777 FAX:(360) 337-4867

HARPER ESTUARY BARRIER CORRECTION

PEDESTRIAN PATH

KITSAP COUNTY, WASHINGTON
SECTION 2, TOWNSHIP 23 NORTH, RANGE 2 EAST, W.M.

SHEET RD03
42 OF 54

Plotted: Aug 27, 2024 – 12:56pm evo.ho O:\PROJECT\32500\32510\Dwg\08_RD03.dwg Layout Name: RD03

XREF LIST
Ltscale: 20
Resolved
TTBLK

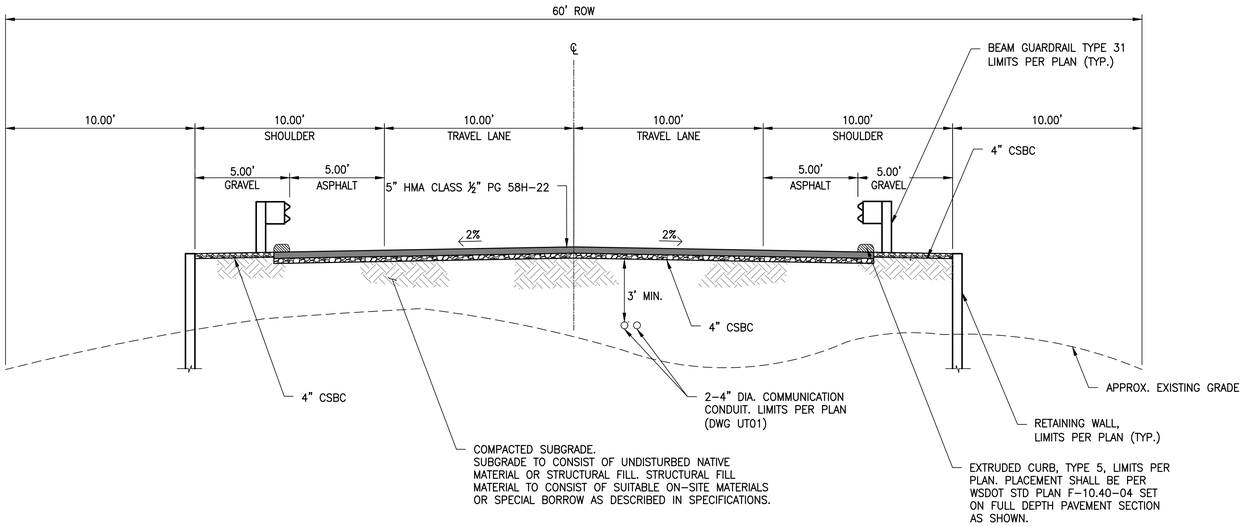

ROADWAY SECTION WITH RETAINING WALL

NOT TO SCALE
STA 10+40 TO STA 11+40
STA 12+70 TO STA 13+80

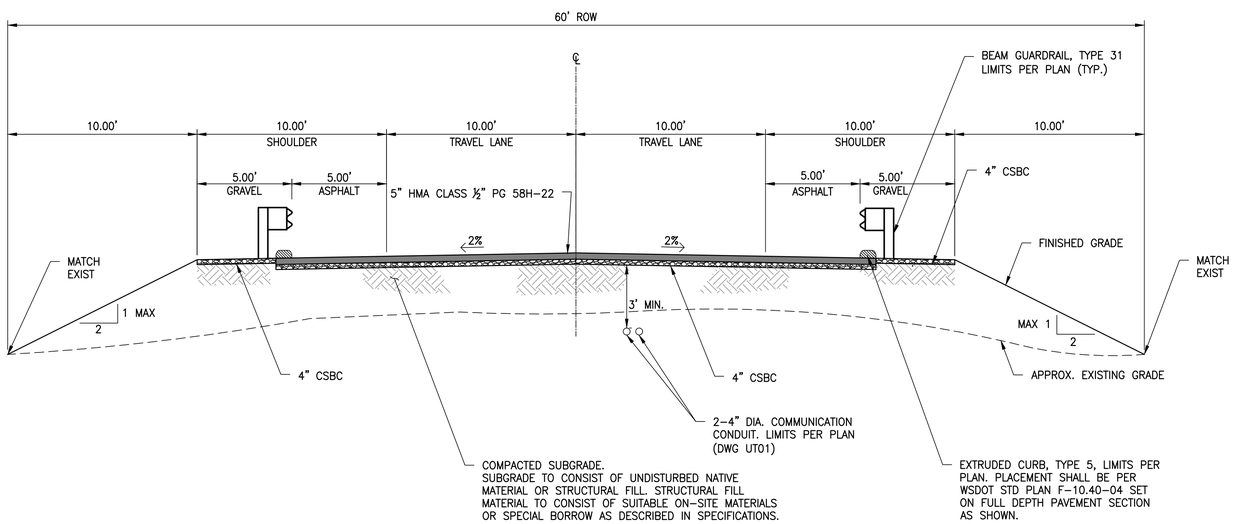

ROADWAY SECTION WITH 2:1 SLOPE GRADING

NOT TO SCALE
STA 13+80 TO STA 18+40

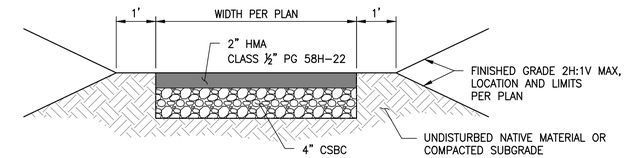

TYPICAL SECTION - ASPHALT DRIVEWAY

NOT TO SCALE

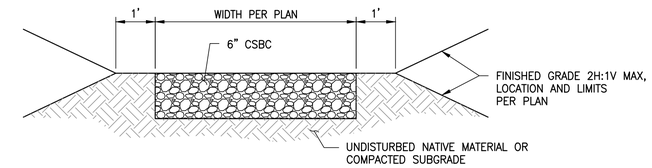

TYPICAL SECTION - GRAVEL DRIVEWAY

NOT TO SCALE

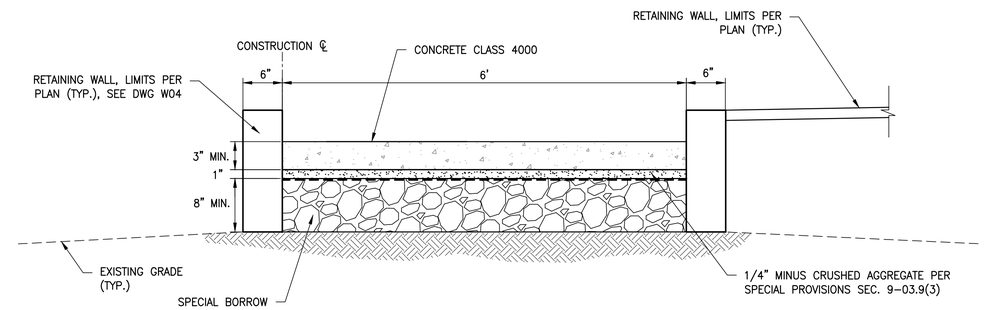

TYPICAL SECTION - PEDESTRIAN PATH

NOT TO SCALE

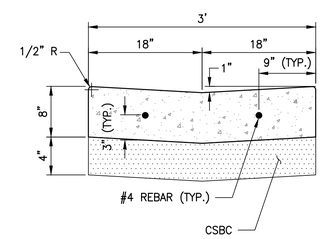

CEMENT CONCRETE VALLEY GUTTER

NOT TO SCALE

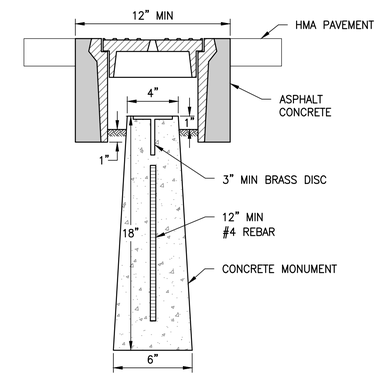

CASED MONUMENTS

NOT TO SCALE

REVISIONS			
No.	BY	DATE	DESCRIPTION

SURVEYED: COUNTY
DESIGNED: EH
DRAWN: AK
CHECKED: TP
CRP No. 2626
DATE: 08/28/24

Otak
11241 Willows Road NE, Suite 200
Redmond, WA 98052
425.822.4446
www.otak.com

YI HUA HO — STATE OF WASHINGTON — 52003 — REGISTERED PROFESSIONAL ENGINEER — 8/28/24

KITSAP COUNTY 18 57 WASHINGTON

KITSAP COUNTY
DEPT. OF PUBLIC WORKS
614 DIVISION STREET MS-26
PORT ORCHARD, WA 98366
TEL:(360) 337-5777 FAX:(360) 337-4867

HARPER ESTUARY BARRIER CORRECTION

TYPICAL SECTIONS

KITSAP COUNTY, WASHINGTON
SECTION 2, TOWNSHIP 23 NORTH, RANGE 2 EAST, W.M.

SHEET RD04
43 OF 55

Plotted: Sep 05, 2024 - 12:57pm evo.ho K:\PROJECT\32500\32510\Dwg\08_RD04.dwg Layout Name: RD04

XREF LIST
Ltscale: 20
Resolved
TTBLK
C510R910
C510R510
C510G420
C510U630

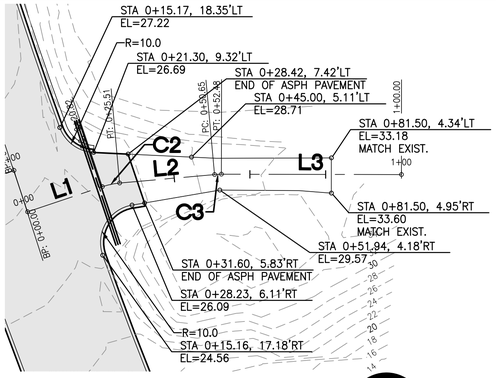

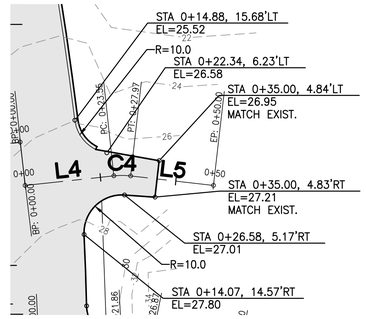

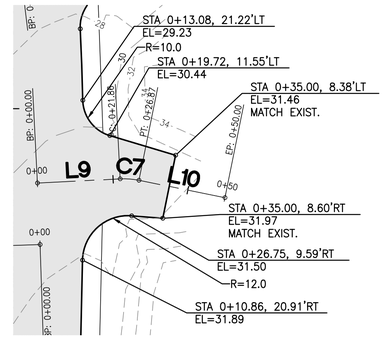

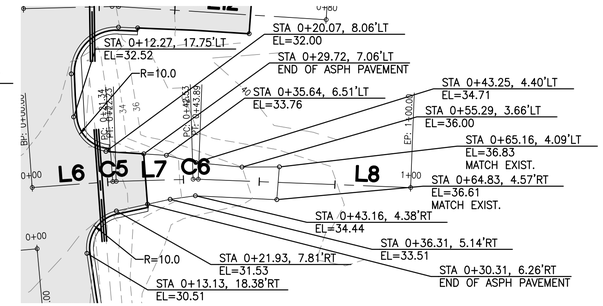

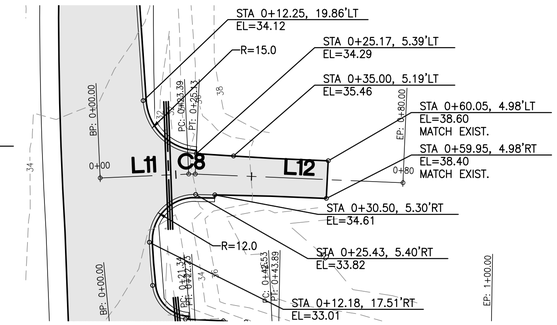

DWY 16+58 RT					
NUMBER	STATION	LENGTH	RADIUS	BEARING	DELTA
L1	0+00.00	20.82'		S21°42'41"E	
C2	0+20.82	4.69'	20.00'	S14°59'15"E	13°26'53"
L2	0+25.51	25.14'		S8°15'48"E	
C3	0+50.65	1.83'	20.00'	S5°38'42"E	5°14'11"
L3	0+52.48	47.52'		S3°01'37"E	

DWY 16+70 LT					
NUMBER	STATION	LENGTH	RADIUS	BEARING	DELTA
L4	0+00.00	23.55'		N21°01'13"W	
C4	0+23.55	4.42'	20.00'	N14°40'58"W	12°40'30"
L5	0+27.97	22.03'		N8°20'43"W	

DWY 17+23 LT					
NUMBER	STATION	LENGTH	RADIUS	BEARING	DELTA
L9	0+00.00	21.86'		N17°47'23"W	
C7	0+21.86	5.00'	20.00'	N10°37'17"W	14°20'12"
L10	0+26.87	23.13'		N3°27'11"W	

DWY 17+39 RT					
NUMBER	STATION	LENGTH	RADIUS	BEARING	DELTA
L6	0+00.00	21.34'		S16°48'59"E	
C5	0+21.34	0.89'	20.00'	S15°32'18"E	2°33'22"
L7	0+22.23	20.30'		S14°15'37"E	
C6	0+42.53	1.36'	20.00'	S12°19'09"E	3°52'55"
L8	0+43.89	56.11'		S10°22'42"E	

DWY 17+87 RT					
NUMBER	STATION	LENGTH	RADIUS	BEARING	DELTA
L11	0+00.00	23.39'		S13°58'46"E	
C8	0+23.39	1.74'	20.00'	S11°29'28"E	4°58'36"
L12	0+25.13	54.87'		S9°00'11"E	

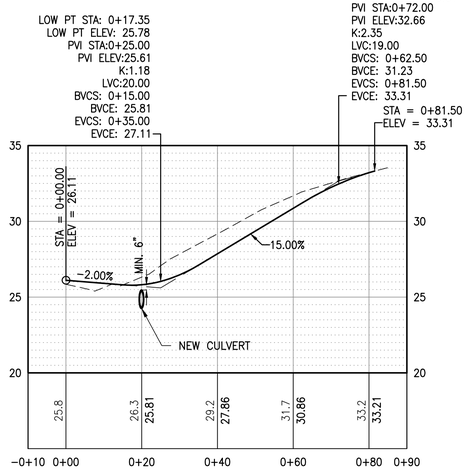

DRIVEWAY AT STA 16+58 RT

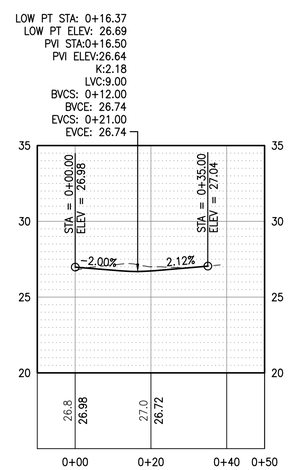

DRIVEWAY AT STA 16+70 LT

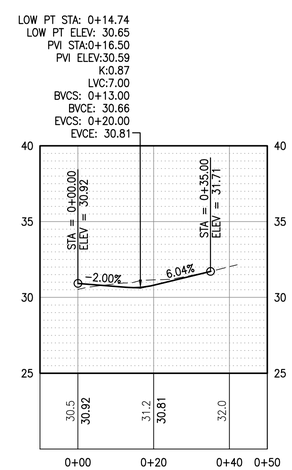

DRIVEWAY AT STA 17+23 LT

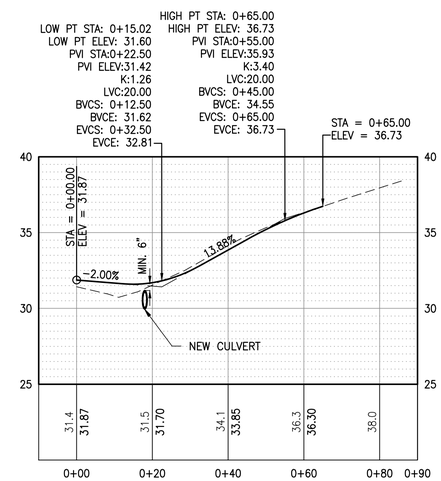

DRIVEWAY AT STA 17+39 RT

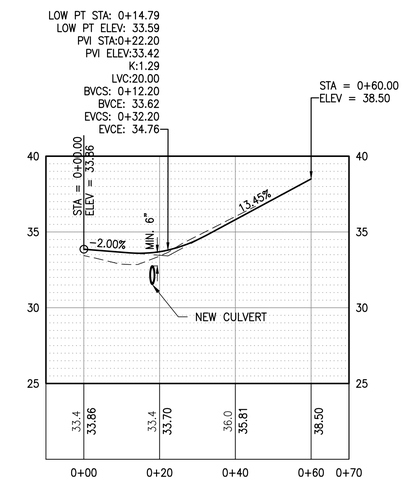

DRIVEWAY AT STA 17+87 RT

HORZ SCALE 20' 0' 20' 40' IN FEET
VERT SCALE 5' 0' 5' 10' IN FEET

REVISIONS			
No.	BY	DATE	DESCRIPTION

SURVEYED: COUNTY
DESIGNED: EH
DRAWN: AK
CHECKED: TP
CRP No. 2626
DATE: 08/28/24

Otak
11241 Willows Road NE, Suite 200
Redmond, WA 98052
425.822.4446
www.otak.com

YI HUA HO
STATE OF WASHINGTON
52003
REGISTERED PROFESSIONAL ENGINEER
8/28/2024

KITSAP COUNTY
DEPT. OF PUBLIC WORKS
614 DIVISION STREET MS-26
PORT ORCHARD, WA 98366
TEL:(360) 337-5777 FAX:(360) 337-4867

HARPER ESTUARY BARRIER CORRECTION

DRIVEWAY PLAN AND PROFILE

KITSAP COUNTY, WASHINGTON
SECTION 2, TOWNSHIP 23 NORTH, RANGE 2 EAST, W.M.

Plotted: Aug 27, 2024 - 12:57pm evo.ho K:\PROJECT\32500\32510\Dwg\08_RD05.dwg Layout Name: RD05

XREF LIST
Ltscale: 20

Resolved
TTBLK
C510R270
C510R900
T510X800
HARPER
C510R510
T510X370
C510N032
C510G432
C510U630

Unresolved
C510N030
VicMap
Section Sub Detail
Parcel Overview Detail
Right-of-way Detail

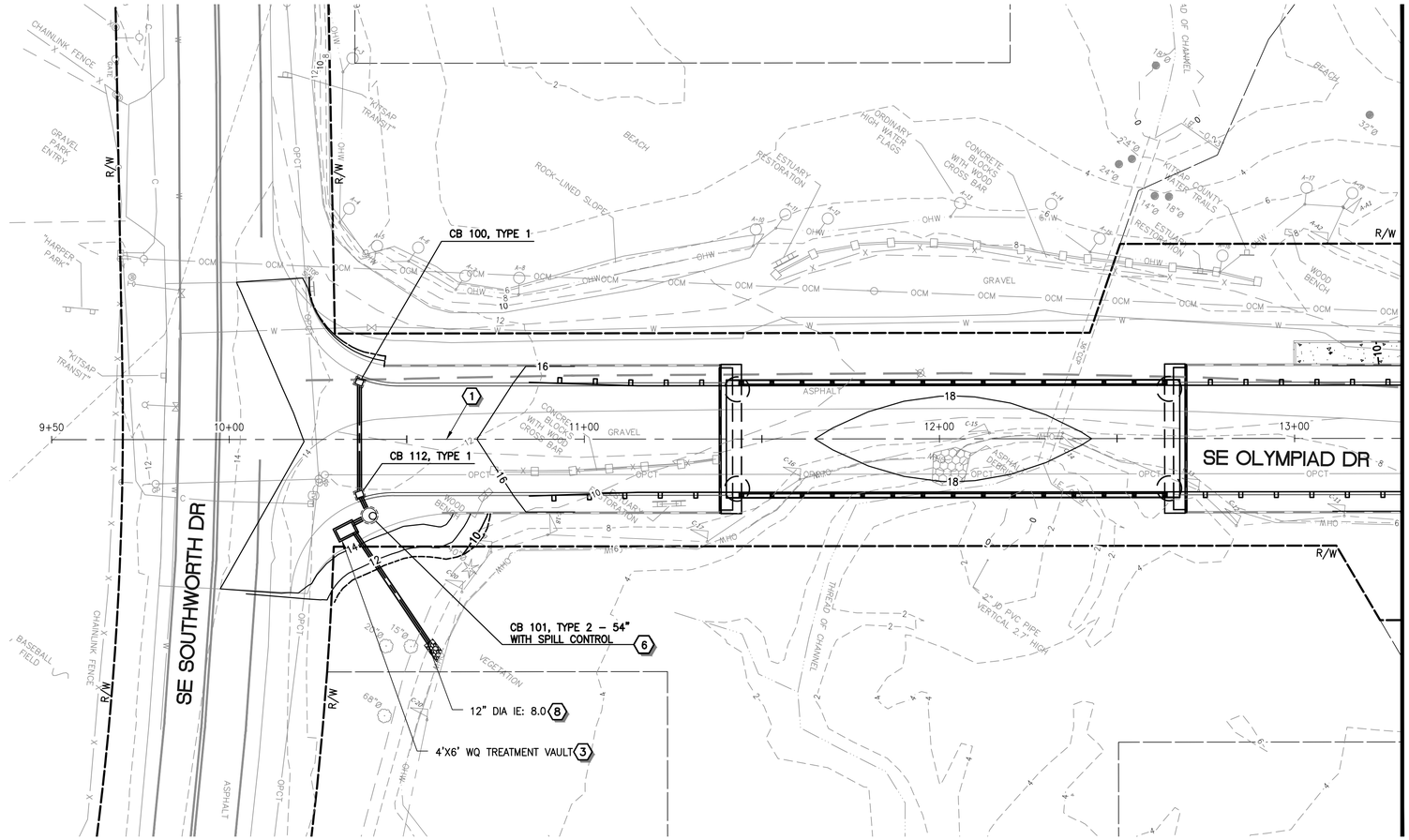

DRAINAGE CONSTRUCTION NOTES

1. CONSTRUCTION CENTERLINE, SEE DWG RW01 FOR DETAILS.
2. CONSTRUCT DRAINAGE DITCH PER DETAIL ON DWG DD03.
3. CONSTRUCT WATER QUALITY TREATMENT VAULT 1 PER SPECIAL PROVISIONS SEC. 7–06. SEE DWG DD04 FOR DETAILS.
4. CONSTRUCT CULVERT INLET/OUTLET PROTECTION PER DETAIL ON DWG DD03.
5. CONSTRUCT WATER QUALITY TREATMENT VAULT 2 PER SPECIAL PROVISIONS SEC. 7–06. SEE DWG DD04 FOR DETAILS.
6. CONSTRUCT WSDOT TYPE 2 CATCH BASIN WITH SPILL CONTROL PER DETAIL ON DWG DD03.
7. CONSTRUCT DITCH WITH CHECK DAMS PER DETAIL ON DWG DD05.
8. CONSTRUCT ESTUARY OUTLET PROTECTION PER DETAIL ON DWG DD03.
9. CONSTRUCT WSDOT TYPE 1 CATCH BASIN WITH VALLEY GUTTER INLET FRAME AND GRATE PER DETAIL ON DWG DD05.

DRAINAGE GENERAL NOTES

1. STORM DRAIN (SD) PIPE SHALL BE PROFILE WALL PVC STORM SEWER PIPE, UNLESS NOTED OTHERWISE.
2. ALL CATCH BASIN INLETS SHALL HAVE RECTANGULAR LOCKING VANED GRATES PER DETAIL ON SHEET DD05, UNLESS NOTED OTHERWISE.
3. SEE DWG DD03 FOR STRUCTURE PLACEMENT DETAIL.
4. SEE DWGS DD01–DD02 FOR PIPE PROFILES.
5. ALL CATCH BASINS SHALL BE WSDOT STD. PLAN B–5.20–03 TYPE 1, UNLESS OTHERWISE NOTED.
6. PIPE LENGTHS SHOWN ARE FROM CENTER OF CATCH BASIN TO CENTER OF CATCH BASIN.

LEGEND

- STORM PIPE
- CATCH BASIN
- CULVERT INLET/OUTLET PROTECTION, PER DETAIL ON DWG DD03
- DRAINAGE DITCH
- COMPOST SOCK CHECK DAM PER DETAIL ON DWG DD03

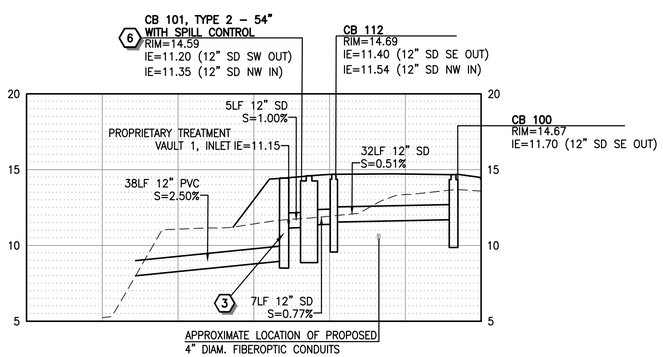

CB 100 TO CB 101

STORM STRUCTURE DATA

STRUCTURE NAME	TYPE	STATION (OFFSET)	RIM ELEVATION	IE
CB 100	TYPE 1	STATION: 10+36.69 OFFSET: 16.15' LT	14.67'	12" OUT 11.70' SE
CB 101	TYPE 2 – 54" WITH SPILL CONTROL	STATION: 10+39.46 OFFSET: 21.37' RT	14.59'	12" IN 11.35' NW 12" OUT 11.20' SW
CB 102	TYPE 1	STATION: 13+46.83 OFFSET: 13.82' LT	15.93'	12" OUT 12.90' NE
CB 103	TYPE 1	STATION: 13+55.65 OFFSET: 13.67' RT	15.85'	12" OUT 12.80' NE
CB 104	TYPE 1	STATION: 13+84.14 OFFSET: 13.81' LT	15.74'	12" IN 12.71' SW 12" OUT 12.60' NE
CB 105	TYPE 1	STATION: 13+84.13 OFFSET: 13.85' RT	15.74'	12" IN 12.65' SW 12" OUT 12.50' NE

STORM STRUCTURE DATA

STRUCTURE NAME	TYPE	STATION (OFFSET)	RIM ELEVATION	IE
CB 106	TYPE 1	STATION: 14+21.14 OFFSET: 15.00' LT	15.90'	12" IN 12.41' SW 12" IN 12.93' NE 12" OUT 12.30' SE
CB 107	TYPE 1	STATION: 14+84.07 OFFSET: 13.60' RT	17.09'	12" OUT 14.00' SW
CB 110	TYPE 2 – 54" WITH SPILL CONTROL	STATION: 14+21.14 OFFSET: 19.64' RT	15.81'	12" IN 11.95' NW 12" OUT 11.00' NE
CB 111	TYPE 1	STATION: 14+66.65 OFFSET: 14.99' LT	16.64'	12" OUT 13.60' SW
CB 112	TYPE 1	STATION: 10+36.70 OFFSET: 15.45' RT	14.69'	12" IN 11.54' NW 12" OUT 11.40' SE
CB 113	TYPE 1	STATION: 14+21.14 OFFSET: 13.69' RT	15.93'	12" IN 12.31' SW 12" IN 12.14' NW 12" IN 12.31' NE 12" OUT 12.14' SE

HORZ SCALE 20' 0' 20' 40' IN FEET

Plotted: Aug 28, 2024 – 12:06pm evo.ho O:\PROJECT\32500\32510\Dwg\09_DD01-DD02.dwg Layout Name: DD01

REVISIONS			
No.	BY	DATE	DESCRIPTION

SURVEYED: COUNTY
DESIGNED: DAS
DRAWN: AK
CHECKED: GSL
CRP No. 2626
DATE: 08/28/24

Otak
11241 Willows Road NE, Suite 200
Redmond, WA 98052
425.822.4446
www.otak.com

CHARLES DWIGHT DEWBS, STATE OF WASHINGTON, 57610, REGISTERED PROFESSIONAL ENGINEER
08/28/2024

KITSAP COUNTY 18 57 WASHINGTON
KITSAP COUNTY
DEPT. OF PUBLIC WORKS
614 DIVISION STREET MS–26
PORT ORCHARD, WA 98366
TEL:(360) 337–5777 FAX:(360) 337–4867

HARPER ESTUARY BARRIER CORRECTION

DRAINAGE PLAN AND PROFILE

KITSAP COUNTY, WASHINGTON
SECTION 2, TOWNSHIP 23 NORTH, RANGE 2 EAST, W.M.

XREF LIST
Ltscale: 20
Resolved
TTBLK
C510R270
C510R900
T510X800
HARPER
C510R510
T510X370
C510N032
C510G432
C510U630
Unresolved
C510N030
VicMap
Section Sub Detail
Parcel Overview Detail
Right-of-way Detail

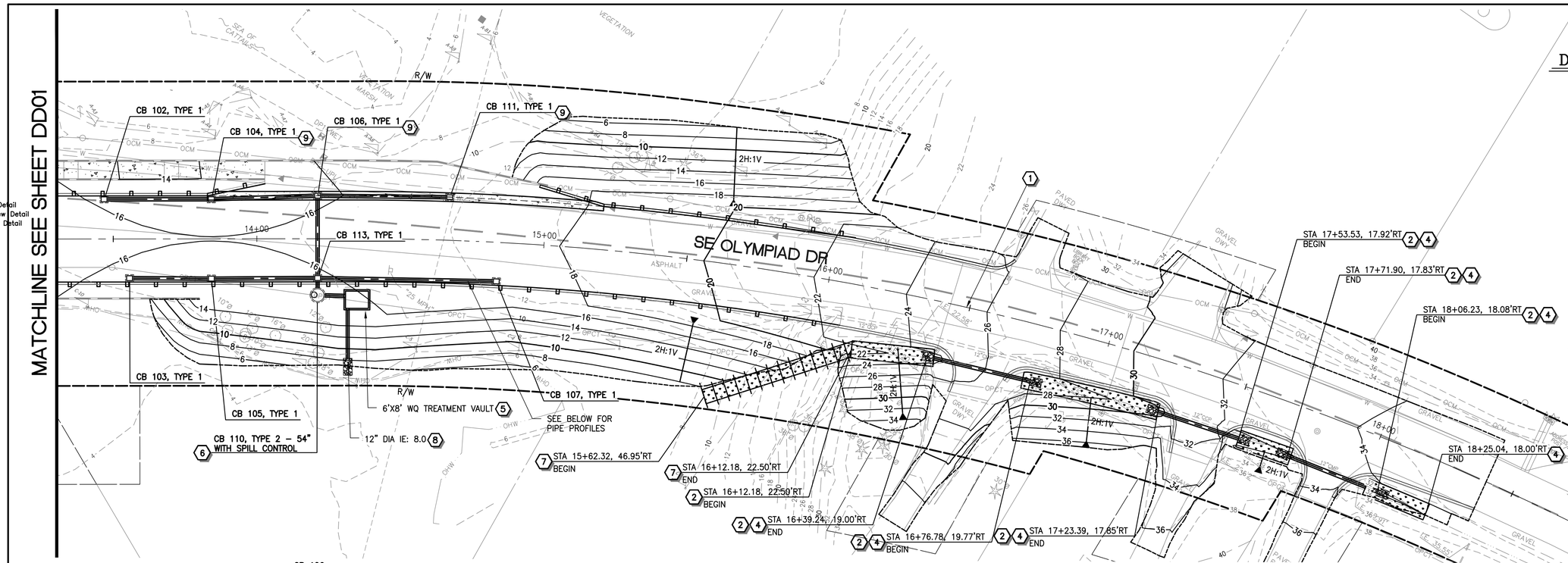

DRAINAGE CONSTRUCTION NOTES

1. CONSTRUCTION CENTERLINE, SEE DWG RW01 FOR DETAILS.
2. CONSTRUCT DRAINAGE DITCH PER DETAIL ON DWG DD03.
3. CONSTRUCT WATER QUALITY TREATMENT VAULT 1 PER SPECIAL PROVISIONS SEC. 7–06. SEE DWG DD04 FOR DETAILS.
4. CONSTRUCT CULVERT INLET/OUTLET PROTECTION PER DETAIL ON DWG DD03.
5. CONSTRUCT WATER QUALITY TREATMENT VAULT 2 PER SPECIAL PROVISIONS SEC. 7–06. SEE DWG DD04 FOR DETAILS.
6. CONSTRUCT WSDOT TYPE 2 CATCH BASIN WITH SPILL CONTROL PER DETAIL ON DWG DD03.
7. CONSTRUCT DITCH WITH CHECK DAMS PER DETAIL ON DWG DD05.
8. CONSTRUCT ESTUARY OUTLET PROTECTION PER DETAIL ON DWG DD03.
9. CONSTRUCT WSDOT TYPE 1 CATCH BASIN WITH VALLEY GUTTER INLET FRAME AND GRATE PER DETAIL ON DWG DD05.

DRAINAGE GENERAL NOTES

1. STORM DRAIN (SD) PIPE SHALL BE PROFILE WALL PVC STORM SEWER PIPE, UNLESS NOTED OTHERWISE.
2. ALL CATCH BASIN INLETS SHALL HAVE RECTANGULAR LOCKING VANED GRATES PER DETAIL ON SHEET DD05, UNLESS NOTED OTHERWISE.
3. SEE DWG DD03 FOR STRUCTURE PLACEMENT DETAIL.
4. SEE DWGS DD01–DD02 FOR PIPE PROFILES.
5. ALL CATCH BASINS SHALL BE WSDOT STD. PLAN B–5.20–03 TYPE 1, UNLESS OTHERWISE NOTED.
6. PIPE LENGTHS SHOWN ARE FROM CENTER OF CATCH BASIN TO CENTER OF CATCH BASIN.

LEGEND

- STORM PIPE
- CATCH BASIN
- CULVERT INLET/OUTLET PROTECTION, PER DETAIL ON DWG DD03
- DRAINAGE DITCH
- COMPOST SOCK CHECK DAM PER DETAIL ON DWG DD03

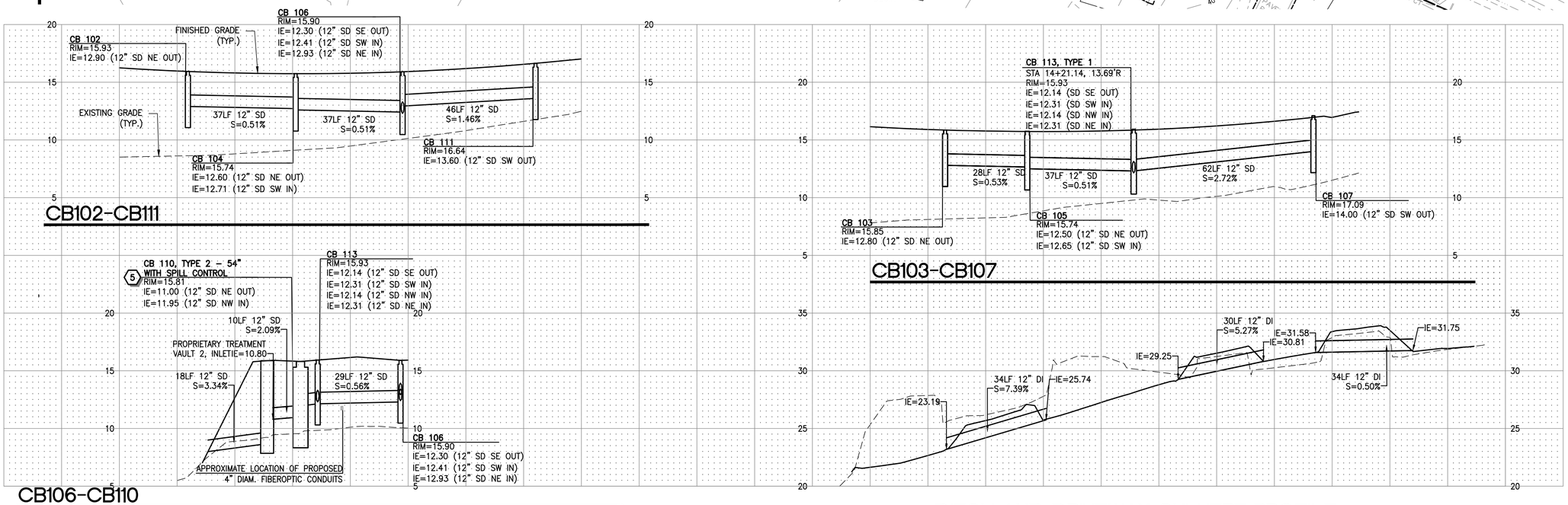

DITCH AND DRIVEWAY CULVERT PROFILE

HORZ 20' 0' 20' 40' SCALE IN FEET
VERT 10' 0' 10' 20' SCALE IN FEET

REVISIONS			
No.	BY	DATE	DESCRIPTION

SURVEYED: COUNTY
DESIGNED: DAS
DRAWN: AK
CHECKED: GSL
CRP No. 2626
DATE: 08/28/24

Otak
11241 Willows Road NE, Suite 200
Redmond, WA 98052
425.822.4446
www.otak.com

CHARLES DWIGHT DAWES STATE OF WASHINGTON 57610 REGISTERED PROFESSIONAL ENGINEER
08/28/2024

KITSAP COUNTY 18 57 WASHINGTON
KITSAP COUNTY
DEPT. OF PUBLIC WORKS
614 DIVISION STREET MS–26
PORT ORCHARD, WA 98366
TEL:(360) 337–5777 FAX:(360) 337–4867

HARPER ESTUARY BARRIER CORRECTION

DRAINAGE PLAN AND PROFILE

KITSAP COUNTY, WASHINGTON
SECTION 2, TOWNSHIP 23 NORTH, RANGE 2 EAST, W.M.

Plotted: Aug 28, 2024 – 12:06pm evo.ho O:\PROJECT\32500\32510\Dwg\09_DD01-DD02.dwg Layout Name: DD02

XREF LIST
Ltscale: 1
Resolved
TTBLK
C510G432
C510R270
HARPER
T510X800
C510U630
C510R510
C510G950
Unresolved
C510U900
VicMap
Section Sub Detail
Parcel Overview Detail
Right-of-way Detail

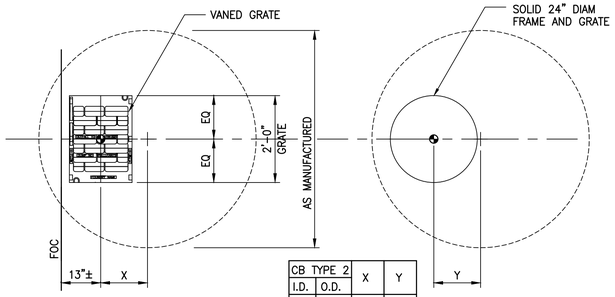

CB TYPE 2		X	Y
I.D.	O.D.		
48"	56"	11"	12"
54"	63"	14"	15"
60"	70"	18"	18"

TYPE 2

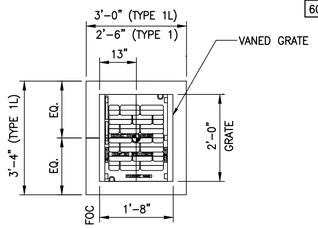

TYPE 1 & TYPE 1L

KEY

CENTER OF GRATE

CENTER OF STRUCTURE

NOTES:

1. CENTER OF GRATE = CENTER OF STRUCTURE FOR TYPE 1 AND TYPE 1L STRUCTURES ONLY.
2. SPECIFIED NORTHING AND EASTING OR STATION AND OFFSET REFERENCE CENTER OF STRUCTURE FOR ALL DRAINAGE FACILITIES, UNLESS NOTED OTHERWISE.
3. RIM ELEVATION AND STATION/OFFSET OR NORTHING/EASTING REFERENCES ARE TO CENTER OF STRUCTURE.

STRUCTURE PLACEMENT DETAIL

NOT TO SCALE

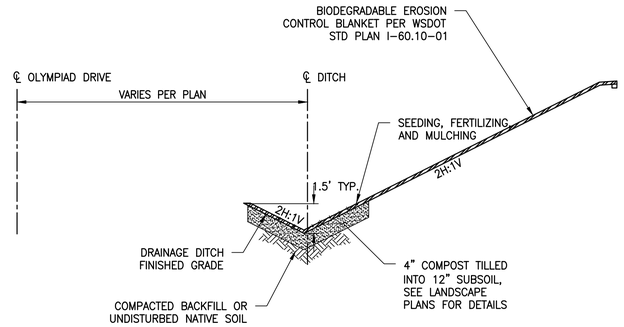

TYPICAL DRAINAGE DITCH SECTION

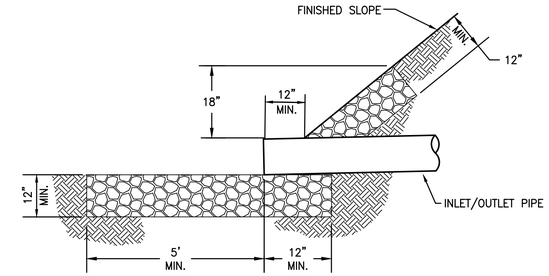

SECTION

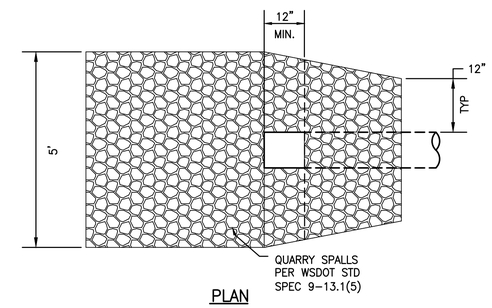

PLAN

CULVERT INLET/OUTLET PROTECTION

NOT TO SCALE

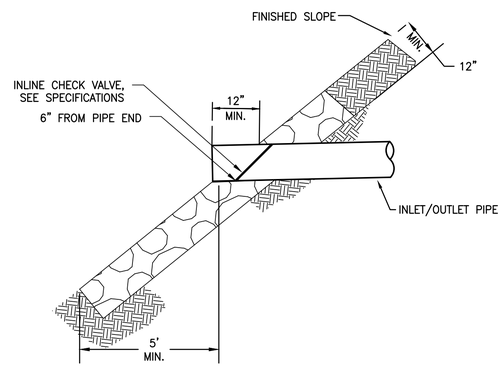

SECTION

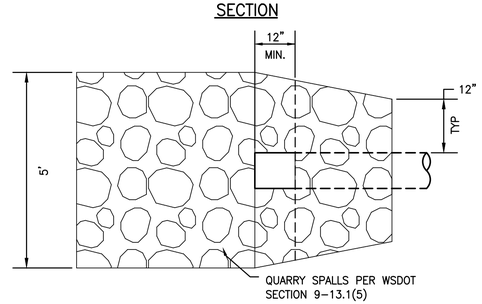

PLAN

ESTUARY OUTLET PROTECTION WITH IN-LINE CHECK VALVE

NOT TO SCALE

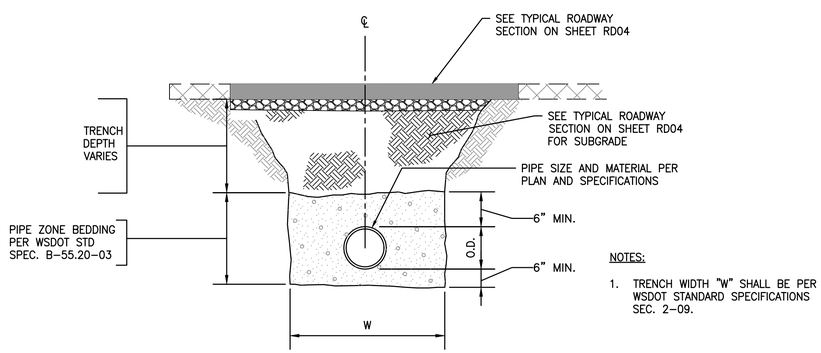

NOTES:

1. TRENCH WIDTH "W" SHALL BE PER WSDOT STANDARD SPECIFICATIONS SEC. 2-09.

TYPICAL TRENCH

NOT TO SCALE

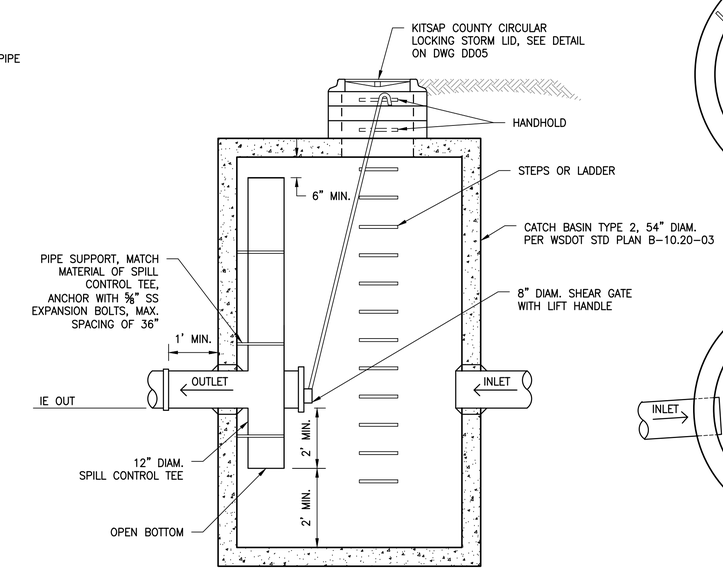

SECTION A-A

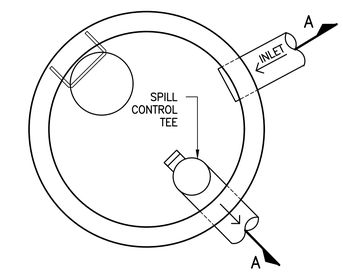

CB101 PLAN

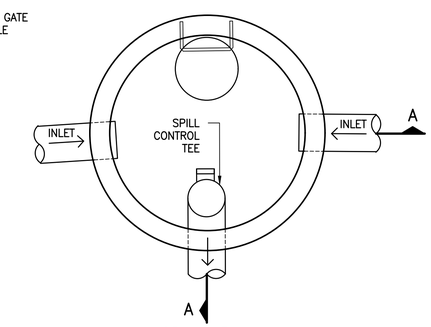

CB110 PLAN

CATCH BASIN TYPE 2 WITH SPILL CONTROL

NOT TO SCALE

REVISIONS			
No.	BY	DATE	DESCRIPTION

SURVEYED: COUNTY
DESIGNED: DAS
DRAWN: AK
CHECKED: GSL
CRP No. 2626
DATE: 08/28/24

Otak
11241 Willows Road NE, Suite 200
Redmond, WA 98052
425.822.4446
www.otak.com

CHARLES DWIGHT DAVIS, STATE OF WASHINGTON, 57610, REGISTERED PROFESSIONAL ENGINEER
08/28/2024

KITSAP COUNTY 18 57 WASHINGTON

KITSAP COUNTY
DEPT. OF PUBLIC WORKS
614 DIVISION STREET MS-26
PORT ORCHARD, WA 98366
TEL:(360) 337-5777 FAX:(360) 337-4867

HARPER ESTUARY BARRIER CORRECTION

DRAINAGE DETAILS

KITSAP COUNTY, WASHINGTON
SECTION 2, TOWNSHIP 23 NORTH, RANGE 2 EAST, W.M.

SHEET DD03
47 OF 55

Plotted: Aug 28, 2024 - 12:07pm evo.ho O:\PROJECT\32500\32510\Dwg\09_DD03-DD04.dwg Layout Name: DD03

XREF LIST
Ltscale: 20
Resolved
TTBLK
C510B190
C510R270
C510R900
C510R510
T510X800

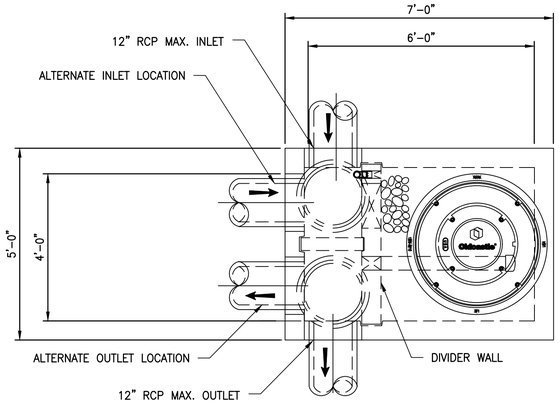

PLAN VIEW

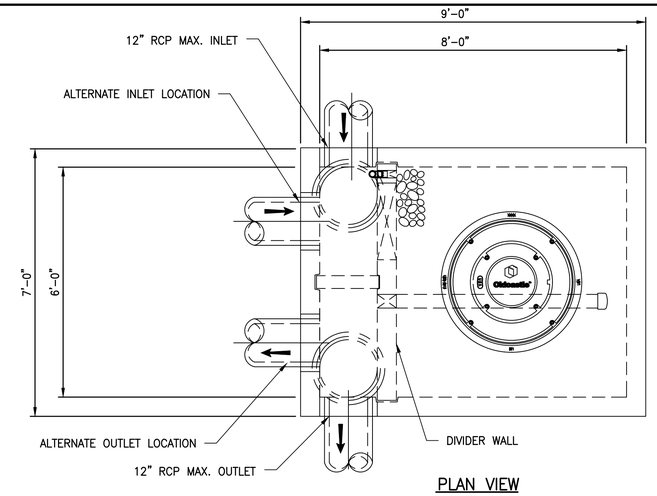

PLAN VIEW

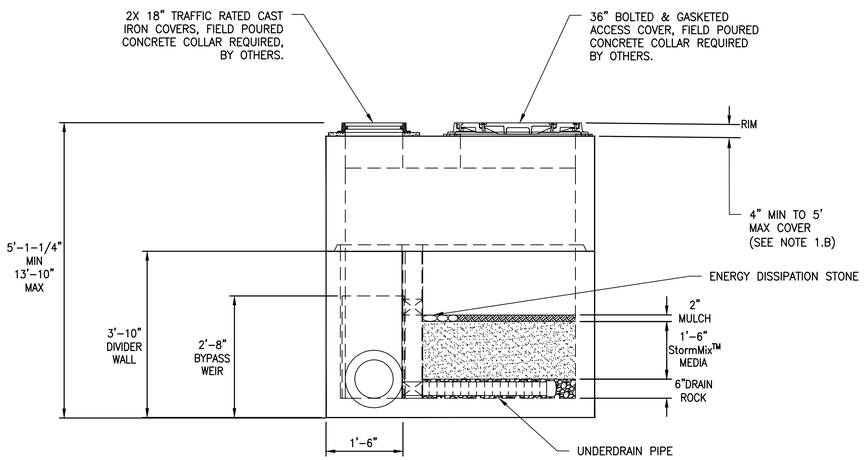

ELEVATION VIEW

WATER QUALITY TREATMENT VAULT 1 (OLDCASTLE BIOPOD BPU-46IB, OR APPROVED EQUAL)

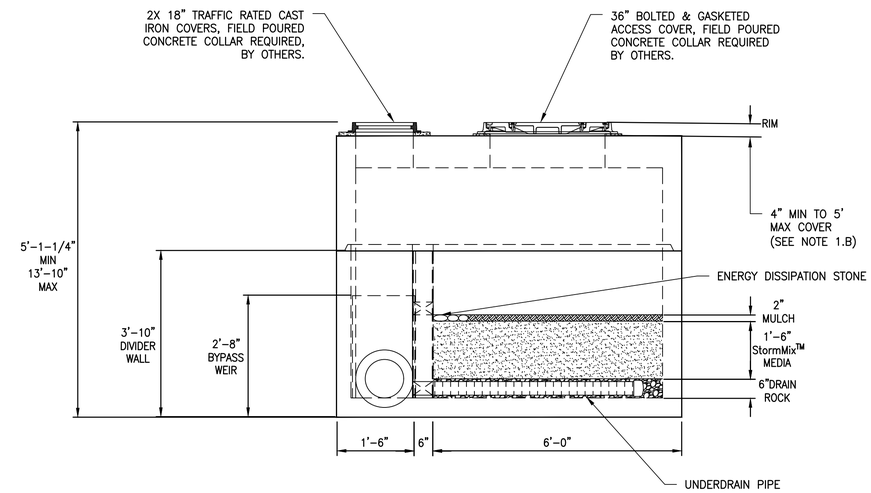

ELEVATION VIEW

WATER QUALITY TREATMENT VAULT 2 (OLDCASTLE BIOPOD BPU-68IB, OR APPROVED EQUAL)

NOTES:

1. DESIGN LOADINGS:
   A. AASHTO HS-20-44 (WITH IMPACT)
   B. DESIGN SOIL COVER: 5'-0" MAXIMUM
   C. ASSUMED WATER TABLE: BELOW BASE OF PRECAST (ENGINEER-OF-RECORD TO CONFIRM SITE WATER TABLE ELEVATION)
   D. LATERAL EARTH PRESSURE: 45 PCF (DRAINED)
   E. LATERAL LIVE LOAD SURCHARGE: 80 PSF (APPLIED TO 8'-0" BELOW GRADE)
   F. NO LATERAL SURCHARGE FROM ADJACENT BUILDINGS, WALLS, PIERS, OR FOUNDATIONS.
2. CONCRETE 28-DAY MINIMUM COMPRESSIVE STRENGTH: 5,000 PSI MINIMUM.
3. REINFORCING: REBAR, ASTM A615/A706, GRADE 60
4. CEMENT: ASTM C150
5. REQUIRED ALLOWABLE SOIL BEARING CAPACITY: 2,500 PSF
6. REFERENCE STANDARD:
   A.ASTM C890
   B.ASTM C913
   C.ACI 318-14
7. THIS STRUCTURE IS DESIGNED TO THE PARAMETERS NOTED HEREIN. ENGINEER-OF-RECORD SHALL VERIFY THAT NOTED PARAMETERS MEET OR EXCEED PROJECT REQUIREMENTS. IF DESIGN PARAMETERS ARE INCORRECT, REVIEWING ENGINEER/AUTHORITY SHALL NOTIFY OLDCASTLE INFRASTRUCTURE UPON REVIEW.
8. INLET AND OUTLET HOLES WILL BE FACTORY CORED/CAST PER PLANS AND CUSTOMER REQUIREMENTS. INLET AND OUTLET LOCATIONS CAN BE MIRRORED.
9. CONTRACTOR RESPONSIBLE TO VERIFY ALL SIZES, LOCATIONS, AND ELEVATIONS OF OPENINGS.
10. CONTRACTOR RESPONSIBLE TO ENSURE ADEQUATE BEARING SURFACE IS PROVIDED (I.E. COMPACTED AND LEVEL PER PROJECT SPECIFICATIONS).
11. SECTION HEIGHTS, SLAB/WALL THICKNESSES, AND KEYWAYS ARE SUBJECT TO CHANGE AS REQUIRED FOR SITE REQUIREMENTS AND/OR DUE TO PRODUCT AVAILABILITY AND PRODUCTION FACILITY CONSTRAINTS.
12. MAXIMUM PICK WEIGHTS:
    A.TOP: XX,XXX LBS
    B.BASE: XX,XXX LBS*
    (* COMBINED WEIGHT OF BASE INCLUDES BYPASS WEIR, DIVIDER WALL, ROCK & MEDIA)
13. INTERNALS SHALL CONSIST OF UNDERDRAIN PIPE, ROCK, STORMMIX MEDIA, MULCH, DIVIDER WALL, BYPASS WEIR AND OPTIONAL DRAIN DOWN.

Oldcastle Infrastructure™
A CRH COMPANY
Ph: 800.579.8819 | www.oldcastleinfrastructure.com/stormwater

BioPod™ Biofilter System (STANDARD)
Underground Vault with Internal Bypass

CUSTOMER
—
PROJECT NAME
—

SHEET NAME	REVISION	SHEET
Specifier Drawing	—	1 OF 1
	REV DATE —	

Bioretention/ Biofiltration

WATER QUALITY TREATMENT VAULT DETAILS

NOT TO SCALE

NOTES:

1. CONTRACTOR SHALL PROVIDE TYPE 3E WORKING DRAWINGS FOR ENGINEER APPROVAL FOR WATER QUALITY TREATMENT VAULTS.
2. WATER QUALITY TREATMENT VAULTS SHALL CONFORM TO PROJECT SPECIAL PROVISIONS FOR APPROVED EQUAL.

REVISIONS

No.	BY	DATE	DESCRIPTION

SURVEYED:	COUNTY
DESIGNED:	DAS
DRAWN:	AK
CHECKED:	GSL
CRP No.	2626
DATE:	08/28/24

Otak
11241 Willows Road NE, Suite 200
Redmond, WA 98052
425.822.4446
www.otak.com

STATE OF WASHINGTON CHARLES DWIGHT DAWES 57610 REGISTERED PROFESSIONAL ENGINEER
08/28/2024

KITSAP COUNTY 18 57 WASHINGTON

KITSAP COUNTY
DEPT. OF PUBLIC WORKS
614 DIVISION STREET MS-26
PORT ORCHARD, WA 98366
TEL:(360) 337-5777 FAX:(360) 337-4867

HARPER ESTUARY BARRIER CORRECTION

DRAINAGE DETAILS

KITSAP COUNTY, WASHINGTON
SECTION 2, TOWNSHIP 23 NORTH, RANGE 2 EAST, W.M.

SHEET DD04
48 OF 55

Plotted: Aug 28, 2024 - 12:07pm evo.ho O:\PROJECT\32500\32510\Dwg\09_DD03-DD04.dwg Layout Name: DD04

XREF LIST
Ltscale: 1
Resolved
TTBLK
C510G432
C510R270
HARPER
T510X800
C510U630
C510R510
C510G950
Unresolved
C510U900
VicMap
Section Sub Detail
Parcel Overview Detail
Right-of-way Detail

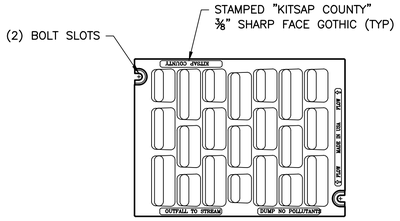

KITSAP COUNTY RECTANGULAR LOCKING VANED GRATE

NOT TO SCALE

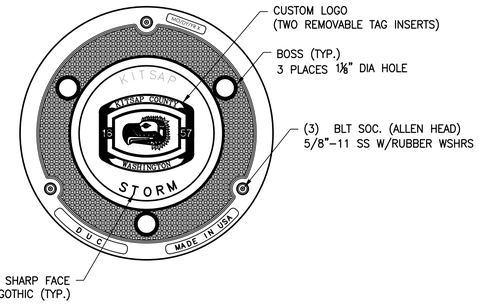

KITSASP COUNTY CIRCULAR LOCKING STORM LID

NOT TO SCALE

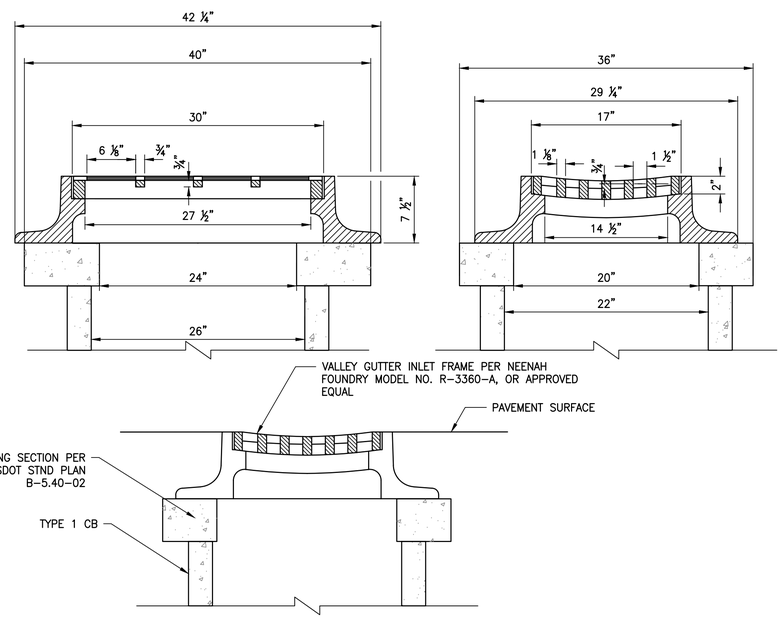

VALLEY GUTTER INLET FRAME AND GRATE

NTS

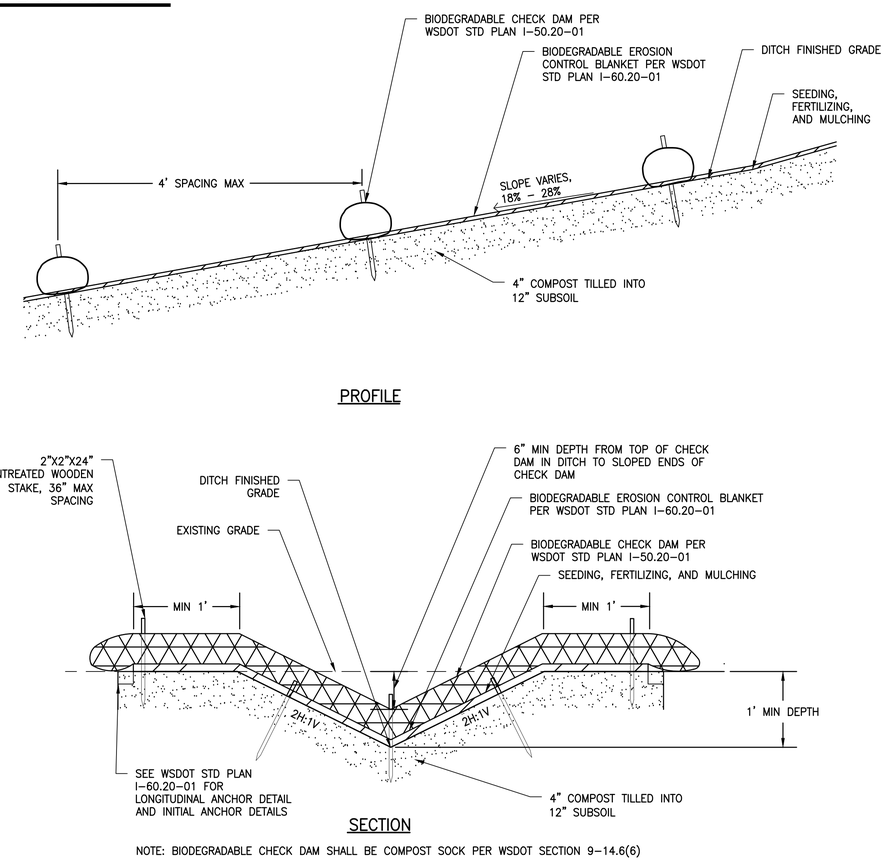

NOTE: BIODEGRADABLE CHECK DAM SHALL BE COMPOST SOCK PER WSDOT SECTION 9-14.6(6)

DITCH WITH CHECK DAMS

NOT TO SCALE

REVISIONS			
No.	BY	DATE	DESCRIPTION

SURVEYED: COUNTY
DESIGNED: DAS
DRAWN: AK
CHECKED: GSL
CRP No. 2626
DATE: 08/28/24

Otak
11241 Willows Road NE, Suite 200
Redmond, WA 98052
425.822.4446
www.otak.com

CHARLES DWIGHT DEWBERRY, STATE OF WASHINGTON, 57610, REGISTERED PROFESSIONAL ENGINEER
08/28/2024

KITSAP COUNTY
DEPT. OF PUBLIC WORKS
614 DIVISION STREET MS-26
PORT ORCHARD, WA 98366
TEL:(360) 337-5777 FAX:(360) 337-4867

HARPER ESTUARY BARRIER CORRECTION

DRAINAGE DETAILS

KITSAP COUNTY, WASHINGTON
SECTION 2, TOWNSHIP 23 NORTH, RANGE 2 EAST, W.M.

Plotted: Aug 28, 2024 - 12:07pm evo.ho O:\PROJECT\32500\32510\Dwg\09_DD05.dwg Layout Name: DD05

XREF LIST
Ltscale: 20

Resolved
TTBLK
C510R270
T510X800
HARPER
C510R510
C510N030
T510X370
C510U920
T510X900
C510U620

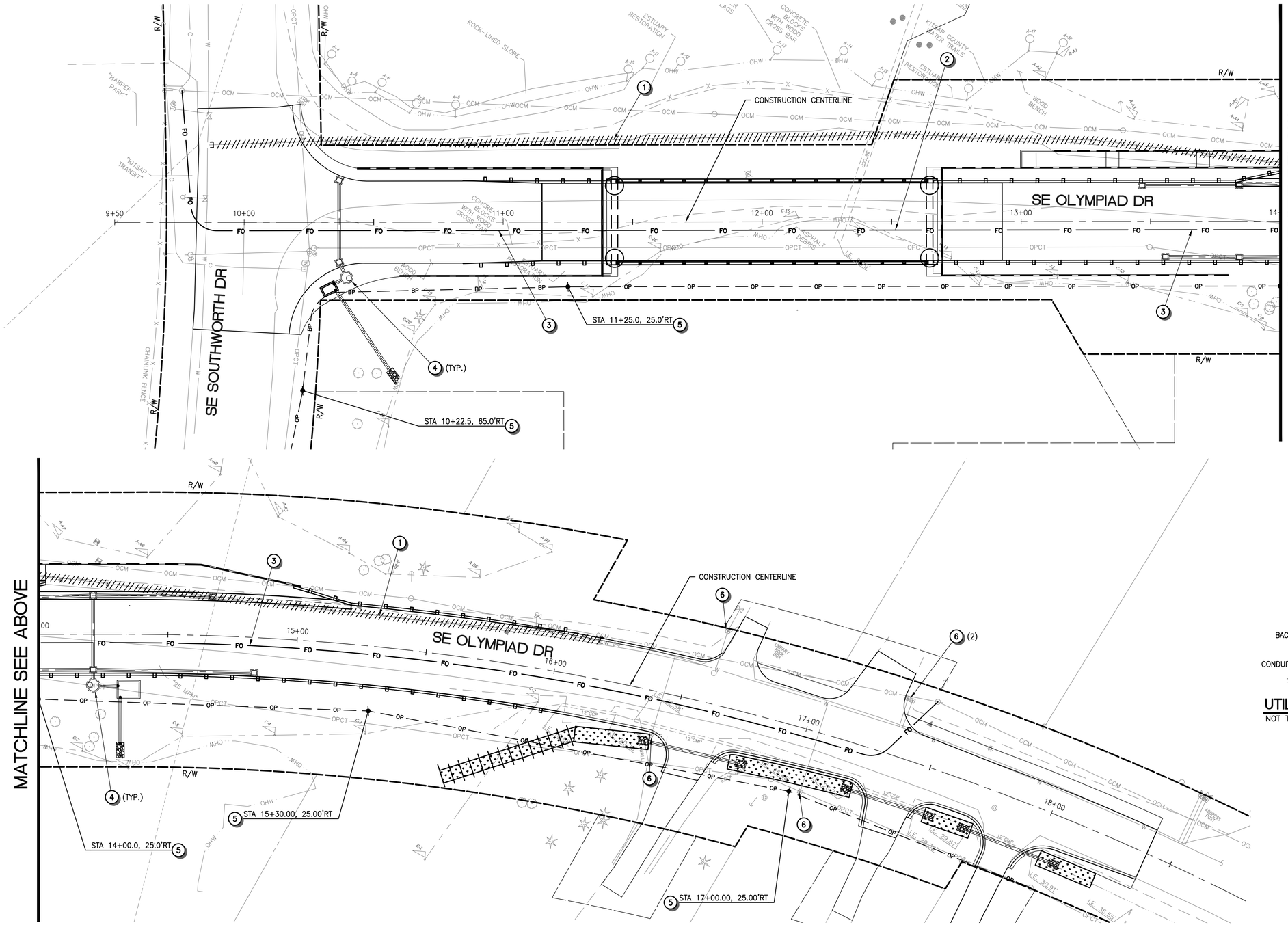

UTILITY CONSTRUCTION NOTES

1. REMOVE EXISTING 6" AC WATER MAIN.
2. SEE BRIDGE PLANS FOR UTILITY HANGERS.
3. INSTALL 2–4" DIAM. (LUMEN) SCHEDULE 40 PVC CONDUIT. SEE TRENCH DETAIL, THIS SHEET.
4. NEW STORM DRAINAGE SYSTEM, SEE DWG DD01–DD02 FOR DETAILS.
5. UTILITY POLE, RELOCATED BY OTHERS (PSE). PROTECT DURING CONSTRUCTION.
6. ADJUST EXISTING VALVE/METER BOX TO FINISHED GRADE.

UTILITY GENERAL NOTES

1. THE CONTRACTOR SHALL PROTECT ALL PRIVATE AND PUBLIC UTILITIES FROM DAMAGE WHEN TRENCHING ACROSS OR BESIDE EXISTING UTILITIES.
2. RELOCATED UTILITIES SHOWN HEREIN ARE ANTICIPATED LOCATION ONLY. UTILITY AGENCIES TO DETERMINE FINAL LOCATION, GRADES, AND TIMING OF CONSTRUCTION WORK. CONTRACTOR SHALL COORDINATE WITH UTILITY AGENCIES AND FIELD VERIFY EXISTING UTILITIES PRIOR TO BEGINNING CONSTRUCTION AND NOTIFY THE ENGINEER OF ANY DISCREPANCIES IN THESE PLANS AND THE RELOCATED UTILITY.
3. PROVIDE MIN. 12–INCH VERTICAL CLEARANCE AT STORM DRAIN CROSSING LOCATIONS.
4. CONTRACTOR TO VERIFY WITH MANCHESTER WATER DISTRICT (MWD) THE LIMIT OF CAPPED AC WATER MAIN PRIOR TO REMOVAL.

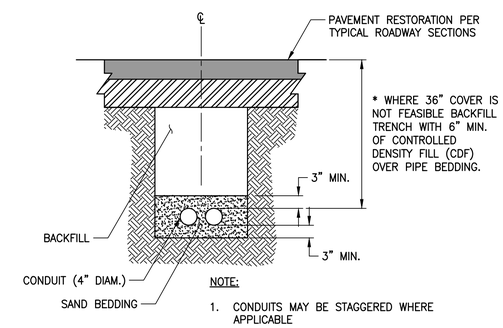

UTILITY TRENCH
NOT TO SCALE

HORZ SCALE 20' 0' 20' 40' IN FEET

REVISIONS			
No.	BY	DATE	DESCRIPTION

SURVEYED: COUNTY
DESIGNED: EH
DRAWN: AK
CHECKED: TP
CRP No. 2626
DATE: 08/28/24

Otak
11241 Willows Road NE, Suite 200
Redmond, WA 98052
425.822.4446
www.otak.com

YI HUA HO — STATE OF WASHINGTON — 52003 — REGISTERED PROFESSIONAL ENGINEER — 8/28/2024

KITSAP COUNTY 18 57 WASHINGTON

KITSAP COUNTY
DEPT. OF PUBLIC WORKS
614 DIVISION STREET MS–26
PORT ORCHARD, WA 98366
TEL:(360) 337–5777 FAX:(360) 337–4867

HARPER ESTUARY BARRIER CORRECTION

UTILITY RELOCATION PLAN

KITSAP COUNTY, WASHINGTON
SECTION 2, TOWNSHIP 23 NORTH, RANGE 2 EAST, W.M.

SHEET UT01
50 OF 55

Plotted: Aug 28, 2024 – 12:07pm evo.ho O:\PROJECT\32500\32510\Dwg\10_UT01.dwg Layout Name: UT01

XREF LIST
Ltscale: 1
Resolved
TTBLK
C510R270
C510N034
C510R510
C510R380
T510X800
HARPER
WDFW_PROPOSED

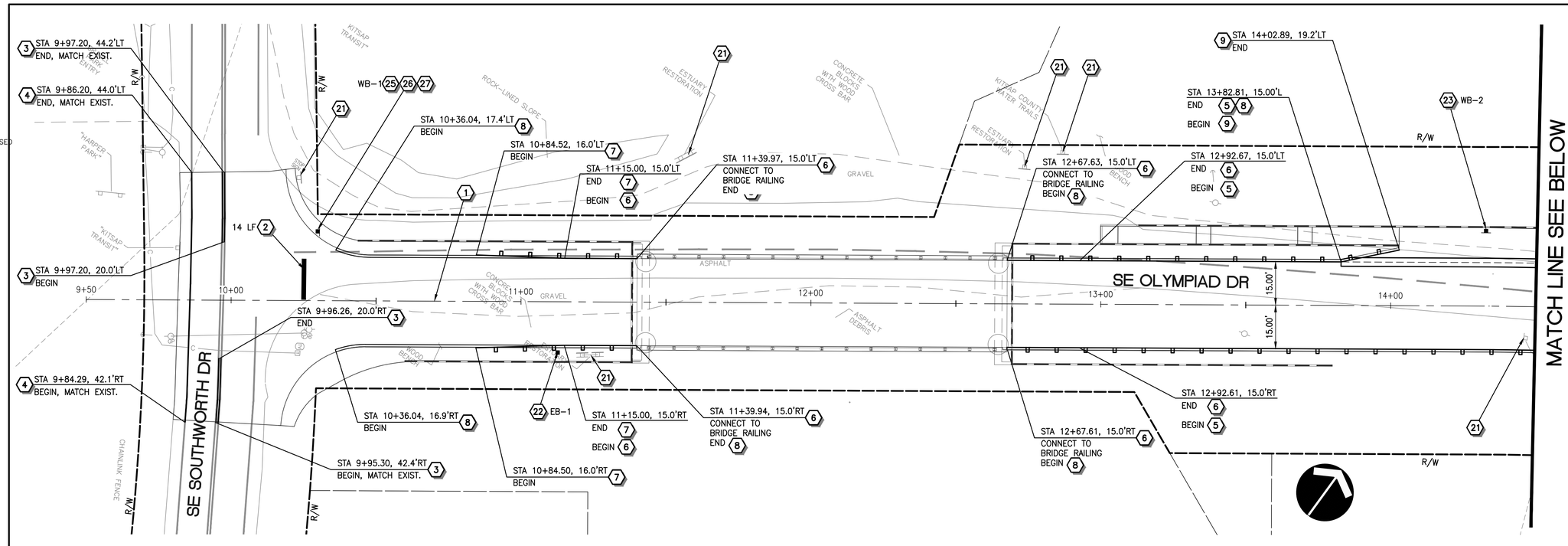

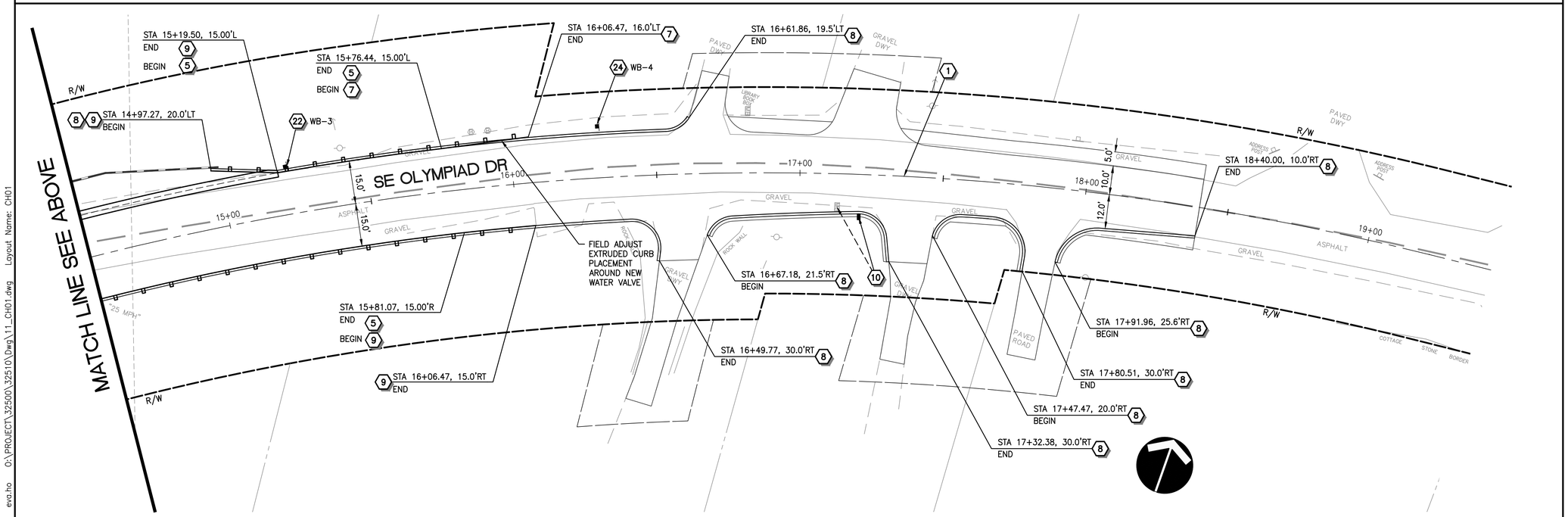

CONSTRUCTION NOTES

1. CONSTRUCTION CENTERLINE, SEE DWG #### FOR DETAILS.
2. INSTALL PLASTIC STOP LINE PER WSDOT STD PLANS M-24.60-04 AND M-15.10-02. STOP LINE SHALL BE 18-INCH WIDE.
3. INSTALL PAINTED DOUBLE YELLOW CENTER LINE PER WSDOT STD PLAN M-20.10-04.
4. INSTALL PLASTIC WHITE WIDE LANE PER WSDOT STD PLAN M-20.10-04.
5. INSTALL BEAM GUARDRAIL TYPE 31 PER WSDOT STD PLAN C-20.10-09, LIMITS PER PLAN.
6. INSTALL BEAM GUARDRAIL TRANSITION SECTION TYPE 24 PER BRIDGE RAILING DETAILS DWG B17 AND WSDOT STD PLAN C-25.30-01.
7. INSTALL BEAM GUARDRAIL TYPE 31 NON-FLARED TERMINAL PER WSDOT STD C-22.45-06.
8. INSTALL EXTRUDED CURB TYPE 5 PER WSDOT STD PLAN F-10.42-00, SEE DWG RD04 FOR DETAIL.
9. INSTALL BEAM GUARDRAIL TYPE 31 ANCHOR TYPE 11 PER WSDOT STD PLAN C-23.70-01.
10. RELOCATE EXIST. MAILBOX WITH NEW MAILBOX SUPPORT TYPE 2 PER WSDOT STD PLAN H-70.20-02.

SIGNING NOTES

21. REMOVE EXISTING SIGN AND RETURN TO THE COUNTY.
22. INSTALL SPEED LIMIT 25 SIGN, R2-1 (24"X30").
23. INSTALL NO PARKING LOADING ZONE, R7-6 (12"X18").
24. INSTALL NO PARKING ANY TIME SIGN, R7-102 (12"X18").
25. INSTALL STOP SIGN, R1-1 (30"X30").
26. INSTALL "SE OLYMPIAD DR" SIGN, D3-103 (VARIES X 9").
27. INSTALL "SE SOUTH WORTH DR" SIGN, D3-102 (VARIES X 9").

GENERAL NOTES

1. SIGNS SHALL BE INSTALLED PER KITSAP COUNTY STD PLAN TYPE ST-2 SIGN SUPPORT.
2. ALL SIGNS SHALL BE INSTALLED TO FACE ONCOMING TRAFFIC (AS SHOWN) UNLESS OTHERWISE NOTED.
3. SEE WASHINGTON STATE "SIGN FABRICATION MANUAL" FOR CODE REFERENCES AND STANDARD SIGN LAYOUT DETAILS.
4. SEE SIGN SCHEDULE ON CH02 FOR SIGN LOCATION DETAILS.

LEGEND

GUARDRAIL

HORZ SCALE: 20' 0' 20' 40' IN FEET

REVISIONS			
No.	BY	DATE	DESCRIPTION

SURVEYED: COUNTY
DESIGNED: EH
DRAWN: AK
CHECKED: TP
CRP No. 2626
DATE: 08/28/24

Otak
11241 Willows Road NE, Suite 200
Redmond, WA 98052
425.822.4446
www.otak.com

YI HUA HO — STATE OF WASHINGTON — 52003 — REGISTERED PROFESSIONAL ENGINEER — 8/28/2024

KITSAP COUNTY
DEPT. OF PUBLIC WORKS
614 DIVISION STREET MS-26
PORT ORCHARD, WA 98366
TEL:(360) 337-5777 FAX:(360) 337-4867

HARPER ESTUARY BARRIER CORRECTION

SIGNING AND STRIPING PLAN

KITSAP COUNTY, WASHINGTON
SECTION 2, TOWNSHIP 23 NORTH, RANGE 2 EAST, W.M.

Plotted: Aug 28, 2024 – 12:08pm evo.ho O:\PROJECT\32500\32510\Dwg\11_CH01.dwg Layout Name: CH01

XREF LIST
Ltscale: 1
Resolved
TTBLK
C510R270
C510N034
C510R510
C510R380
T510X800
HARPER
WDFW_PROPOSED

SIGN NO.	STATION	OFFSET	SIGN TYPE	SIGN SIZE		REMARKS
				W (In.)	H (In.)	
EB-1	11+12	18' RT	R2-1	24	30	SPEED LIMIT 25
WB-1A	10+26	24' LT	R1-1	30	30	STOP
WB-1B	10+26	24' LT	D3-102	VAR.	9	SE SOUTHWORTH DR
WB-1C	10+26	24' LT	D3-102	VAR.	9	SE OLYMPIAD DR (FACING NORTH)
WB-1D	10+26	24' LT	D3-102	VAR.	9	SE OLYMPIAD DR (FACING SOUTH)
WB-2	14+33	26' LT	R7-6	12	18	NO PARKING LOADING ZONE (DOUBLE HEADED ARROW)
WB-3	15+23	17' LT	R2-1	24	30	SPEED LIMIT 25
WB-4	16+30	18' LT	R7-102	12	18	NO PARKING ANY TIME (DOUBLE HEADED ARROW)

SIGNING NOTES:
1. SIGN CLEARANCE FROM BOTTOM OF SIGN – 7' ABOVE SHOULDER AND 6' MIN. FROM EDGE OF PAVEMENT UNLESS OTHERWISE NOTED ON PLAN.

SIGN SCHEDULE

REVISIONS			
No.	BY	DATE	DESCRIPTION

SURVEYED: COUNTY
DESIGNED: EH
DRAWN: AK
CHECKED: TP
CRP No. 2626
DATE: 08/28/24

Otak
11241 Willows Road NE, Suite 200
Redmond, WA 98052
425.822.4446
www.otak.com

YI HUA HO
STATE OF WASHINGTON
52003
REGISTERED
PROFESSIONAL ENGINEER
8/28/2024

KITSAP COUNTY
DEPT. OF PUBLIC WORKS
614 DIVISION STREET MS-26
PORT ORCHARD, WA 98366
TEL:(360) 337-5777 FAX:(360) 337-4867

HARPER ESTUARY BARRIER CORRECTION

SIGN SCHEDULE

KITSAP COUNTY, WASHINGTON
SECTION 2, TOWNSHIP 23 NORTH, RANGE 2 EAST, W.M.

Plotted: Aug 28, 2024 – 12:08pm eva.ho O:\PROJECT\32500\32510\Dwg\11_CH02.dwg Layout Name: CH02

XREF LIST
Ltscale: 20

Resolved
TTBLK
C510B190
C510R270
C510R900
C510R510
T510X800

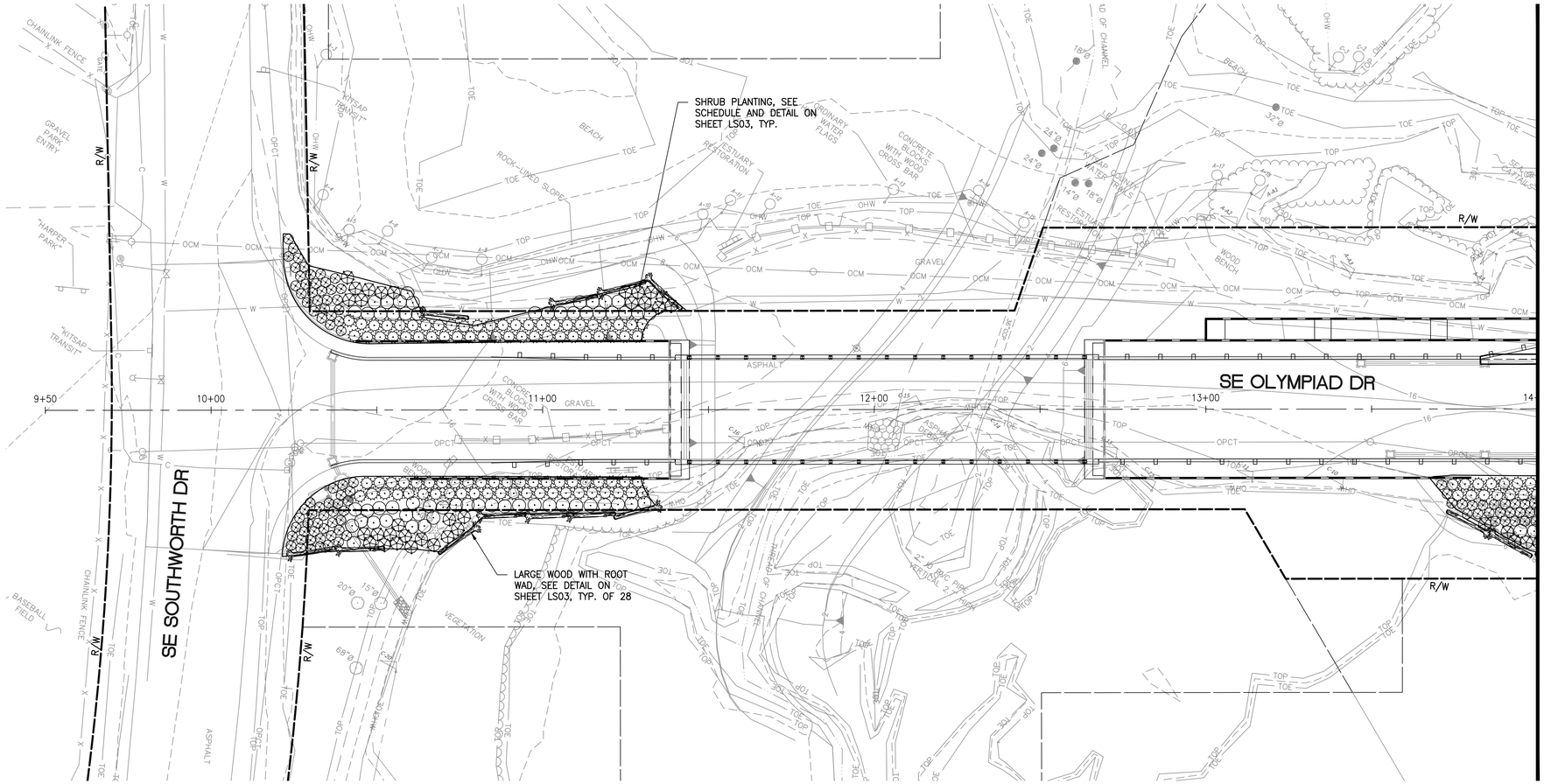

LEGEND

SHRUB PLANTINGS; SEE SHEET LS03 FOR SCHEDULE & DETAIL

LARGE WOOD WITH ROOT WAD ATTACHED – SEE SHEET LS03 FOR SCHEDULE & DETAIL

20' 0' 20' 40'
HORZ
SCALE IN FEET
VERT

REVISIONS			
No.	BY	DATE	DESCRIPTION

SURVEYED: *COUNTY*
DESIGNED:
DRAWN:
CHECKED:
CRP No. *2626*
DATE: *08/28/24*

Otak
11241 Willows Road NE, Suite 200
Redmond, WA 98052
425.822.4446
www.otak.com

STATE OF WASHINGTON
BENJAMIN JAY SCHNEIDER
LICENSED LANDSCAPE ARCHITECT
EXP. 07/13/2024
8/28/2024

KITSAP COUNTY WASHINGTON 18 57

KITSAP COUNTY
DEPT. OF PUBLIC WORKS
614 DIVISION STREET MS-26
PORT ORCHARD, WA 98366
TEL:(360) 337-5777 FAX:(360) 337-4867

HARPER ESTUARY BARRIER CORRECTION

LANDSCAPE PLAN

KITSAP COUNTY, WASHINGTON
SECTION 2, TOWNSHIP 23 NORTH, RANGE 2 EAST, W.M.

SHEET
LS01
53
OF
55

Plotted: Aug 23, 2024 – 9:46am ben.schneider O:\PROJECT\32500\32510\Dwg\15_LS01-LS03.dwg Layout Name: LS01

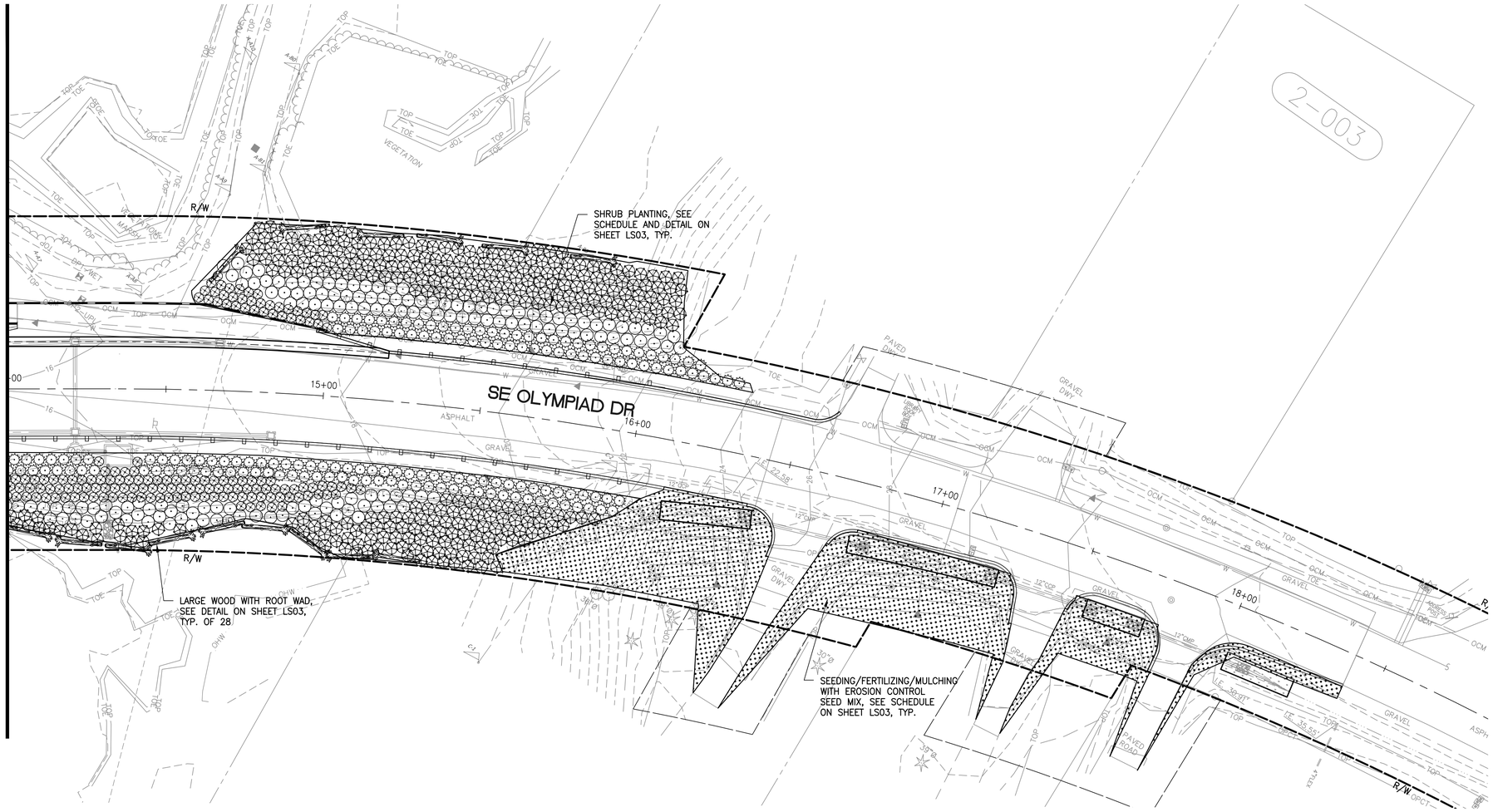

LEGEND

- SHRUB PLANTINGS; SEE SHEET LS03 FOR SCHEDULE & DETAIL
- LARGE WOOD WITH ROOT WAD ATTACHED – SEE SHEET LS03 FOR SCHEDULE & DETAIL
- SEEDING/FERTILIZING/MULCHING WITH EROSION CONTROL SEED MIX – SEE SHEET LS03 FOR SCHEDULE

20' 0' 20' 40'
HORZ SCALE IN FEET

REVISIONS			
No.	BY	DATE	DESCRIPTION

SURVEYED: *COUNTY*
DESIGNED:
DRAWN:
CHECKED:
CRP No. *2626*
DATE: *08/28/24*

Otak
11241 Willows Road NE, Suite 200
Redmond, WA 98052
425.822.4446
www.otak.com

STATE OF WASHINGTON
BENJAMIN JAY SCHNEIDER
LICENSED LANDSCAPE ARCHITECT
EXP. 07/13/2024
8/28/2024

KITSAP COUNTY 18 57 WASHINGTON

KITSAP COUNTY
DEPT. OF PUBLIC WORKS
614 DIVISION STREET MS-26
PORT ORCHARD, WA 98366
TEL:(360) 337-5777 FAX:(360) 337-4867

HARPER ESTUARY BARRIER CORRECTION

LANDSCAPE PLAN

KITSAP COUNTY, WASHINGTON
SECTION 2, TOWNSHIP 23 NORTH, RANGE 2 EAST, W.M.

SHEET LS02
54 OF 55

Plotted: Aug 23, 2024 – 9:46am ben.schneider O:\PROJECT\32500\32510\Dwg\15_LS01-LS03.dwg Layout Name: LS02

PLANTING SCHEDULE

SYMBOL	QTY	BOTANICAL NAME / COMMON NAME	SIZE/SPACING
		TOTAL SHRUB PLANTING AREA: 13,451 SF	
⊕	239	GAULTHERIA SHALLON / SALAL	1 GAL. CONT.; 3' O.C.
⊙	201	HOLODISCUS DISCOLOR / OCEAN SPRAY	1 GAL. CONT.; 4' O.C.
◌	263	ROSA NUTKANA / NOOTKA ROSE	1 GAL. CONT.; 4' O.C.
✧	325	SALIX HOOKERIANA / HOOKER WILLOW	LIVE STAKES; 4' O.C.

OTHER

28 LARGE WOOD WITH ROOT WAD ATTACHED; SPECIES SHALL BE CONIFEROUS; UNANCHORED IN PLACE; MINIMUM 12" DBH X 15' LENGTH; INSTALL PERPENDICULAR TO SLOPE GRADIENT AS SHOWN; ENGINEER TO DIRECT PLACEMENT AT TIME OF CONSTRUCTION

5,200 SF SEEDING/FERTILIZING/MULCHING WITH EROSION CONTROL SEED MIX

PLANTING NOTE

1. AREAS BELOW ELEVATION 6.8' WILL NOT BE PLANTED; THESE LOCATIONS WILL BE ALLOWED TO REVEGETATE THROUGH NATURAL RECRUITMENT.

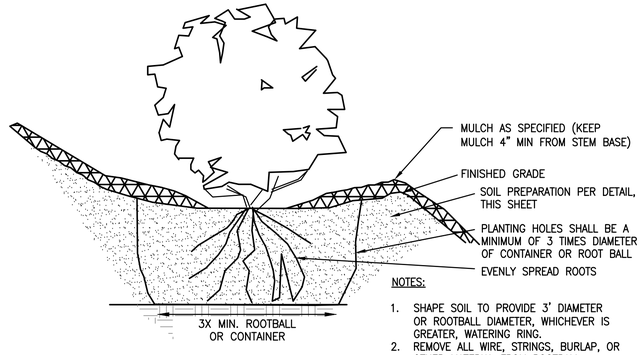

NOTES:

1. SHAPE SOIL TO PROVIDE 3' DIAMETER OR ROOTBALL DIAMETER, WHICHEVER IS GREATER, WATERING RING.
2. REMOVE ALL WIRE, STRINGS, BURLAP, OR OTHER MATERIAL FROM ROOTBALL.

SHRUB PLANTING DETAIL

NOT TO SCALE

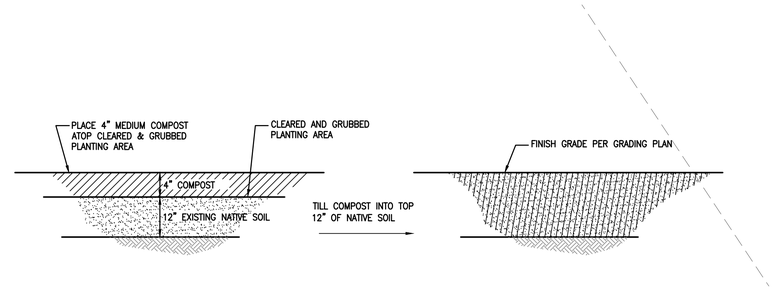

SOIL PREPARATION FOR SEEDED AREAS

NOT TO SCALE

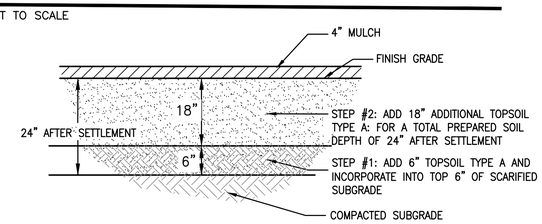

SOIL PREPARATION FOR SHRUBS + LIVE STAKES

NOT TO SCALE

LIVE STAKE INSTALLATION NOTES:

1. KEEP LIVE STAKES MOIST/WET IN BUCKETS OR WET BURLAP SACKS. ON HOT DAYS, KEEP STAKES IN THE SHADE UNTIL YOU PLANT THEM.
2. IN HARD GROUND, USE AN IRON BAR OR STAR DRILL TO PREPARE THE HOLES FOR THE LIVE STAKE.
3. PLACE LIVE STAKE IN PREPARED HOLE; DO NOT USE AXE OR SLEDGE FOR DRIVING LIVE STAKES.
4. AVOID STRIPPING BARK OR BRUISING LIVE STAKES DURING INSTALLATION.
5. BURY 4/5 OF LIVE STAKE LENGTH.
6. AFTER LIVE STAKE IS PLACED IN GROUND, CUT DAMAGED END OF LIVE STAKE TO LEAVE AT LEAST TWO BUDS EXPOSED, MIN.
7. FILL VOID AROUND LIVE STAKE WITH SOIL.

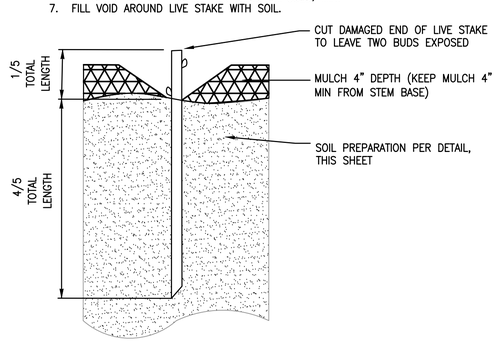

LIVE STAKE PLANTING DETAIL

NOT TO SCALE

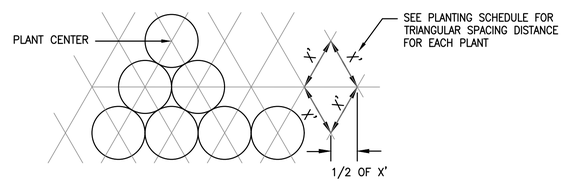

TRIANGULAR SPACING DIAGRAM

NOT TO SCALE

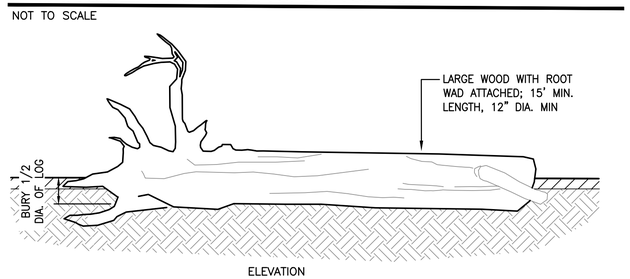

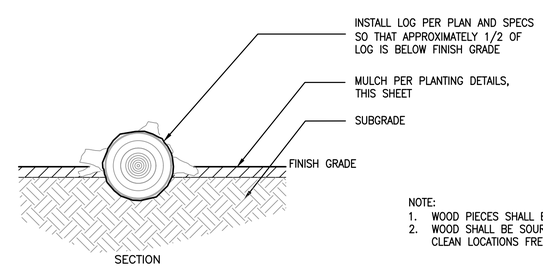

NOTE:

1. WOOD PIECES SHALL BE CONIFEROUS SPECIES (50% MIN.).
2. WOOD SHALL BE SOURCED LOCALLY AND SOURCED FROM CLEAN LOCATIONS FREE OF INVASIVE SPECIES

LARGE WOOD WITH ROOT WAD DETAIL

NOT TO SCALE

REVISIONS			
No.	BY	DATE	DESCRIPTION

SURVEYED: COUNTY
DESIGNED:
DRAWN:
CHECKED:
CRP No. 2626
DATE: 08/28/24

Otak
11241 Willows Road NE, Suite 200
Redmond, WA 98052
425.822.4446
www.otak.com

STATE OF WASHINGTON — BENJAMIN JAY SCHNEIDER — LICENSED LANDSCAPE ARCHITECT — 9481 — EXP. 07/13/2025 — 8/28/2024

KITSAP COUNTY
DEPT. OF PUBLIC WORKS
614 DIVISION STREET MS-26
PORT ORCHARD, WA 98366
TEL:(360) 337-5777 FAX:(360) 337-4867

HARPER ESTUARY BARRIER CORRECTION

LANDSCAPE DETAILS

KITSAP COUNTY, WASHINGTON
SECTION 2, TOWNSHIP 23 NORTH, RANGE 2 EAST, W.M.

SHEET LS03
55 OF 55

Plotted: Aug 23, 2024 – 9:46am ben.schneider O:\PROJECT\32500\32510\Dwg\15_LS01-LS03.dwg Layout Name: LS03