SHEET NOTES:

1. SEE S20.01 FOR SHEET NOTES.
2. CEE GIRT: MINIMUM 12 GAGE WITH 8" WEB, AND 3 1/2" FLANGE. FASTEN TO STEEL BEAMS WITH MINIMUM (10) #12 SCREWS.
3. 3" METAL DECK IS N-32, 18 GAGE, G90 FINISH. ATTACH ROOF SHEATHING TO METAL DECK WITH A MINIMUM #10 SCREW @12" EW. 1
4. SEE UNTOPPED METAL DECK TYPICAL DETAIL FOR MORE INFORMATION ON CONN AT SIDELAP AND CONN AT SUPPORT.
5. ALLOWABLE DIAPHRAGM SHEAR STRENGTH SHALL HAVE 394 PLF CAPACITY OR GREATER.

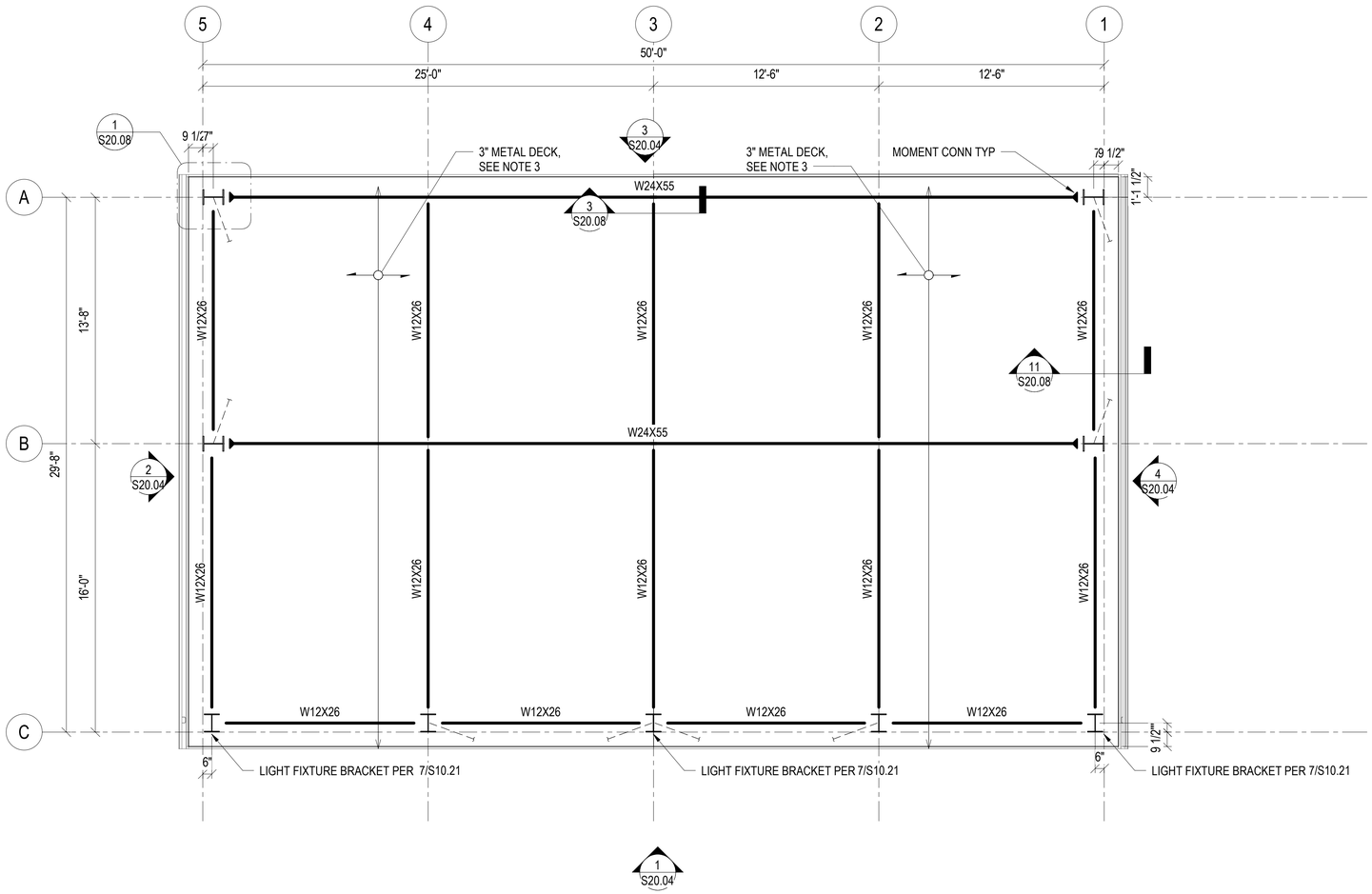

ROOF FRAMING
PLAN
SCALE: 1/4" = 1'-0"

ISSUE FOR BID

	REVISIONS	DATE	BY
	PERMIT REVIEW	02/29/2024	SB
	PERMIT - IFC	03/14/2025	SB
1	ADDENDUM No. 3	12/8/25	SB

DESIGNED S. Baxter
DRAWN A. Bongolan
CHECKED A. Eversman
APPROVED M. Leonard

ONE INCH AT FULL SCALE. IF NOT, SCALE ACCORDINGLY
FILE NAME
JOB No. 21090
DATE 2022.03.10

MICHAEL S. LEONARD — STATE OF WASHINGTON — 20751 — PROFESSIONAL ENGINEER
12-8-2025

KITSAP COUNTY
DEPT. OF PUBLIC WORKS
614 DIVISION STREET MS-26
PORT ORCHARD, WA 98366
TEL:(360) 337-5777 FAX:(360) 337-4867

MLA ENGINEERING
1109 1st Ave, Suite 300
Seattle, WA 98101
(206) 264-2727
www.mlaengineering.com

PROJECT NAME
SILVERDALE RECYCLING AND GARBAGE FACILITY REDEVELOPMENT
KITSAP COUNTY, WASHINGTON

REFUSE SHED 'A' ROOF FRAMING PLAN

DRAWING NO. OF
S20.03

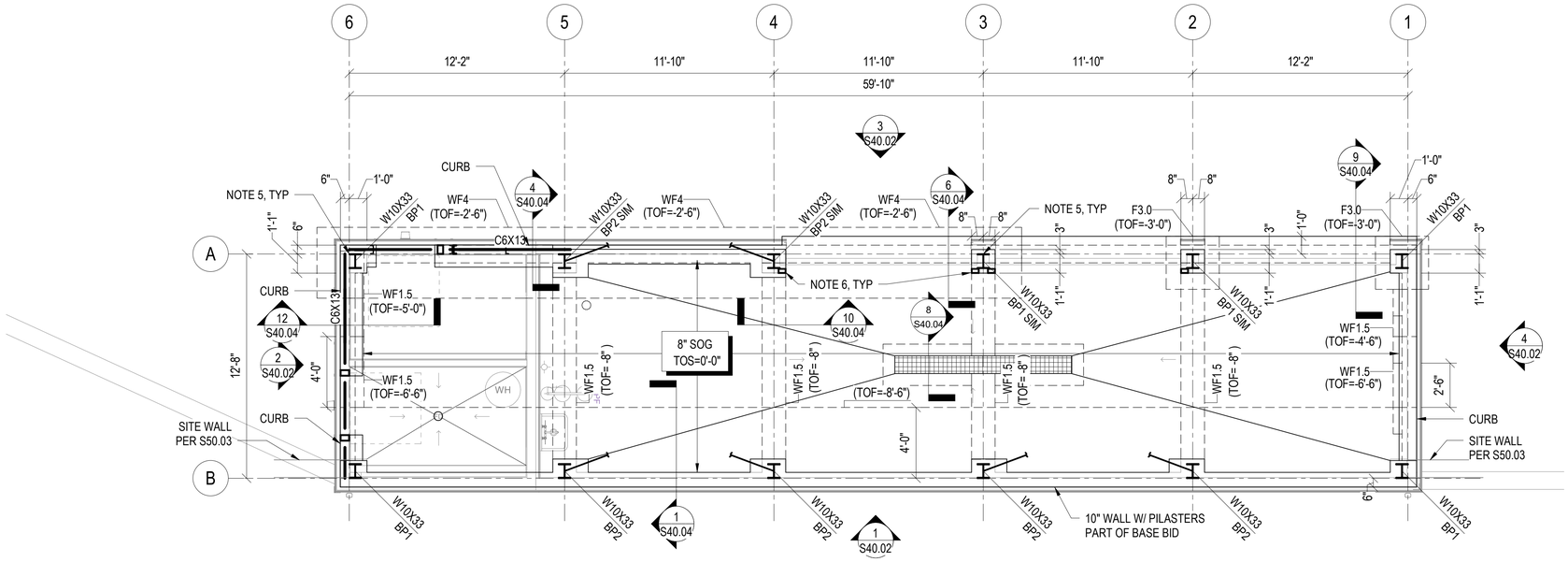

FOUNDATION
PLAN
SCALE: 1/4" = 1'-0"

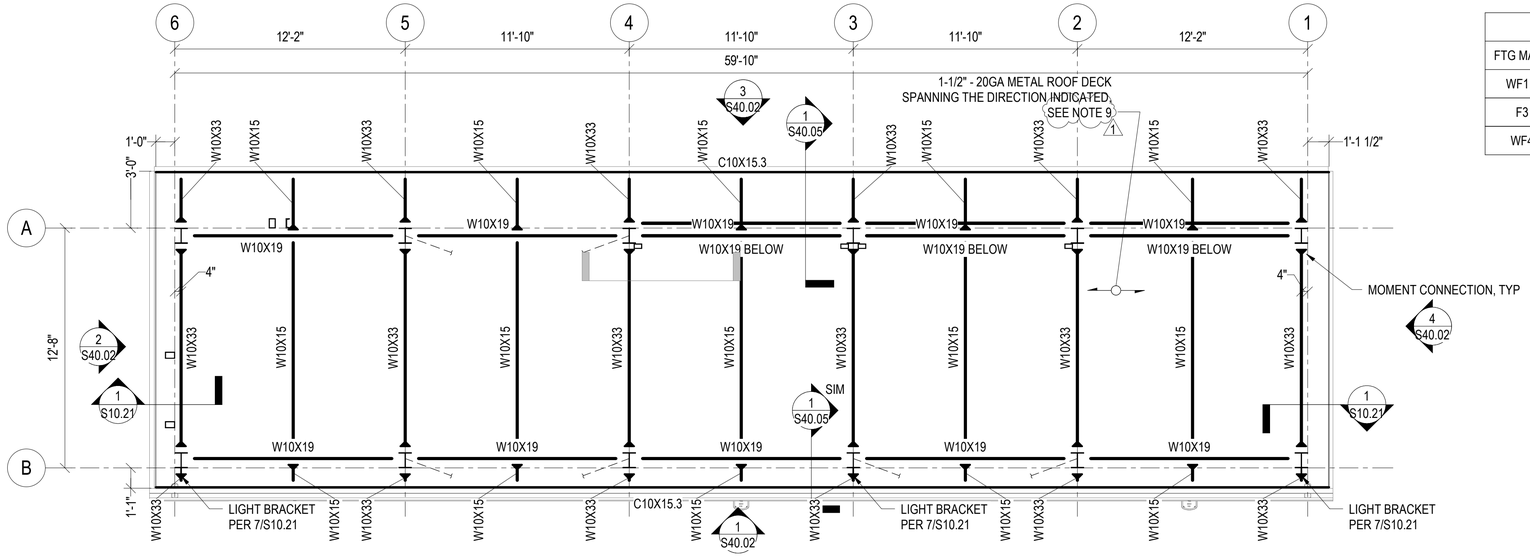

ROOF
PLAN
SCALE: 1/4" = 1'-0"

SHEET NOTES:

1. SLAB-ON-GRADE IS 8" THICK WITH #5 @ 8" OC EACH WAY CENTERED IN SLAB. SLOPE SLAB TO DRAIN AS INDICATED, WHERE OCCURS, MAINTAIN SLAB COVER REQUIREMENTS.
2. PROVIDE CONSTRUCTION JOINTS OR CONTROL JOINTS IN SLAB ON GRADE PER S10.05.
3. MAXIMUM VERTICAL SPACING OF CLADDING ZEE GRITS IS 4FT OC. MINIMUM ZEE GIRTS PROPERTIES ARE AS FOLLOWS: ZEE GRIT: 6"x2.5" - 14 gauge Ixx = 5.011 in^4
4. WALL CLADDING PANNELS SHALL BE MINIMUM 24 GAGE. SCREW PANELS AS FOLLOWS: WALL ZONE 4: #12 @ 12" OC WALL ZONE 5: #12 @ 12" OC REFER TO S40.05 FOR WIND LOADING DIAGRAM AND ZONE MAP.
5. FACE OF STEEL COLUMN SHALL BE ALIGNED WITH GRID LINES.
6. HSS5X3X1/4 FOR COILING DOOR RAIL SUPPORT. SEE DETAIL 9/S40.05. COORDINATE LOCATION WITH COILING DOOR MANUFACTURER.
7. FOR GENERAL NOTES SEE S10.01 - S10.05.
8. FOR TYPICAL DETAILS SEE S10.10 - S10.21.
9. (1) SEE ARCHITECTURAL DETAILS FOR 2X FURRING AT 2'-0" OC ON ROOF. ATTACH FURRING TO METAL DECK WITH #8 X1.25" SCREWS @12" OC. THE SHEATHING ABOVE FURRING SHOULD BE ATTACHED TO FURRING WITH #8 X1.5 SCREWS @ 12" OC.

FOOTING SCHEDULE

FTG MARK	WIDTH	THICKNESS	REINFORCEMENT	REMARKS
WF1.5	1'-4"	1'-6"	(3) #5 TOP & BOTTOM W/ #5 @ 12" TRANS	-
F3	3'-0" x 3'-0"	1'-0"	(4) #5 TOP & BOT	-
WF4	4'-0"	2'-6"	(6) #5 TOP & BOT W/ #5 @ 12" STIRUPS	-

GENERAL SHEET NOTES:

1. ALL DETAILS SHALL BE PART OF BID ALTERNATE 1 UNLESS NOTED OTHERWISE.
2. EAST RETAINING WALL WITH PILASTERS IS PART OF BASE BID. IN THE EVENT THE BID ALTERNATE 1 IS NOT SELECTED REBAR INTERSECTING EAST RETAINING WALL WILL BE INSTALLED WITH FORM SAVER REBAR COUPLER.

ISSUE FOR BID

	REVISIONS	DATE	BY
	PERMIT REVIEW	02/29/2024	SB
	PERMIT - IFC	03/14/2025	SB
1	ADDENDUM No. 3	12/8/25	SB

DESIGNED S. Baxter
DRAWN A. Bongolan
CHECKED A. Eversman
APPROVED M. Leonard

ONE INCH AT FULL SCALE. IF NOT, SCALE ACCORDINGLY
FILE NAME
JOB No. 21090
DATE 2022.03.10

MICHAEL S. LEONARD — STATE OF WASHINGTON — 20751 — PROFESSIONAL ENGINEER
12-8-2025

KITSAP COUNTY
DEPT. OF PUBLIC WORKS
614 DIVISION STREET MS-26
PORT ORCHARD, WA 98366
TEL(360) 337-5777 FAX(360) 337-4867

MLA ENGINEERING
1109 1st Ave, Suite 300
Seattle, WA 98101
(206) 264-2727
www.mlaengineering.com

PROJECT NAME
SILVERDALE RECYCLING AND GARBAGE FACILITY REDEVELOPMENT
KITSAP COUNTY, WASHINGTON

LHHW BUILDING FOUNDATION AND ROOF PLAN

DRAWING NO. OF
S40.01

ROOF TYPE	MATERIAL	DESCRIPTION
RF-1	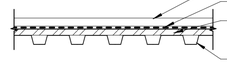	METAL ROOF PANEL WATERPROOF MEMBRANE; SELF-ADHERED 1/2" PLYWOOD SUBSTRATE (SEE STRUCTURAL FOR FASTENING) 1 METAL ROOF DECK PER STRUCTURAL

FLOOR TYPE	MATERIAL	DESCRIPTION
FL-1	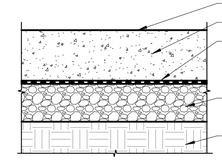	8" CONCRETE SLAB PER STRUCTURAL REINFORCEMENT PER STRUCTURAL VAPOR BARRIER GRAVEL BASE PER STRUCTURAL COMPACTED EARTH PER STRUCTURAL

EXTERIOR WALL TYPE	MATERIAL	DESCRIPTION
8C01	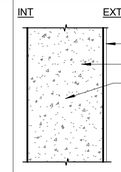	FLUID APPLIED CONCRETE WATERPROOFING CAST-IN-PLACE CONCRETE PER STRUCTURAL REINFORCEMENT PER STRUCTURAL
8SM1	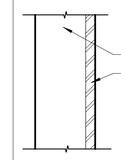	8" WIDE STEEL WALL GIRT METAL PANEL SIDING

ISSUE FOR BID

	REVISIONS	DATE	BY
1	ADDENDUM No. 3	12/7/25	

DESIGNED Designer
DRAWN Author
CHECKED Checker
APPROVED Approver

ONE INCH AT FULL SCALE. IF NOT, SCALE ACCORDINGLY
FILE NAME
JOB No. 21090
DATE DECEMBER 2025

6250 REGISTERED ARCHITECT
Alex E. Rolluda
STATE OF WASHINGTON

KITSAP COUNTY
DEPT. OF PUBLIC WORKS
614 DIVISION STREET MS-26
PORT ORCHARD, WA 98366
TEL:(360) 337-5777 FAX:(360) 337-4867

Parametrix
ENGINEERING . PLANNING . ENVIRONMENTAL SCIENCES
719 SECOND AVENUE SE, SUITE 100 | SEATTLE, WA 98104
P 206.394.3700
WWW.PARAMETRIX.COM

PROJECT NAME
SILVERDALE RECYCLING AND GARBAGE FACILITY
KITSAP COUNTY, WASHINGTON

REFUSE SHED A ASSEMBLY TYPES

DRAWING NO. OF
A20.03

NOTE:
FOR MECHANICAL, ELECTRICAL, PLUMBING, FIRE PROTECTION, MISTER, AND STRUCTURAL SYSTEMS, REFERENCE ENGINEERING DRAWINGS, SCHEDULES AND SPECIFICATIONS

FLOOR PLAN GENERAL NOTES

A. DRAWINGS ARE SHOWN TO SCALE AS NOTED AS AIDS IN DETERMINING SIZE AND PROPORTION. ONLY WRITTEN DESCRIPTIONS AND SIZES SHALL BE UTILIZED FOR CONSTRUCTION. DRAWINGS SHALL NOT BE SCALED.
B. UNLESS NOTED OTHERWISE, DIMENSIONS ON PLANS ARE:
- FACE OF STUD (F.O.S.)
- FACE OF CONCRETE (F.O.C.)
- CENTERLINE OF DOOR AND WINDOW OPENINGS.

C. FIXTURES AND EQUIPMENT SHOWN ARE FOR COORDINATION PURPOSES ONLY. REFER TO THE MANUFACTURER'S PRODUCT DATA, ENGINEERING DRAWINGS, AND SPECIFICATIONS FOR FIXTURE AND EQUIPMENT DESCRIPTIONS AND LOCATIONS.
D. PRESERVATION OF ADJACENT OR EXISTING CONSTRUCTION:
- AVOID DAMAGE TO EXISTING STRUCTURES, SIDEWALKS, CURBS, PAVING AND LANDSCAPING.
- PATCH, REPAIR, OR REPLACE ANY ITEMS DAMAGED, OR AS DIRECTED BY THE PROPERTY OWNER.

E. AVOID UNNECESSARY DISRUPTIONS TO THE FUNCTIONS AND ACTIVITIES OF ADJACENT BUILDINGS.
F. CAREFULLY REVIEW ALL CONTRACT DOCUMENTS PRIOR TO CONSTRUCTION. BRING DISCREPANCIES OR CONFLICTING DATA TO THE ATTENTION OF THE ARCHITECT PRIOR TO COMMENCING WORK.
G. UNLESS NOTED OTHERWISE, INSTALL DOORS WITH 4" FROM HINGE SIDE OF DOOR TO ADJACENT WALL FRAMING.
H. CONTRACTOR TO VERIFY SIZES OF ROUGH DOOR AND WINDOW OPENINGS PRIOR TO ORDERING DOORS AND WINDOWS.
I. GENERAL CONTRACTOR TO COORDINATE FFE WITH CIVIL DRAWINGS.

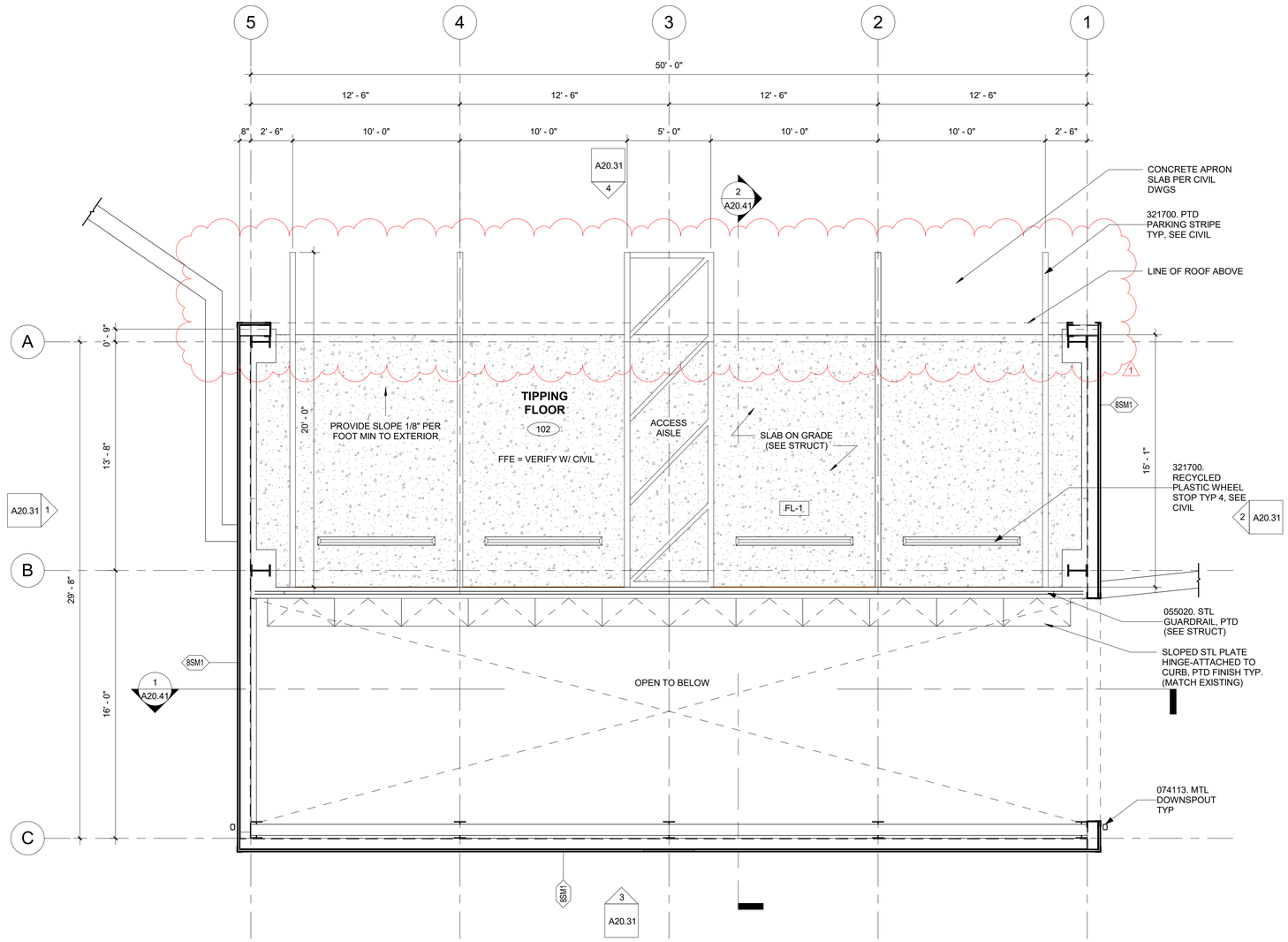

1 FLOOR PLAN
1/4" = 1'-0" @ FULL SIZE
0' 1' 2' 4'

PROJECT NORTH
TRUE NORTH

ISSUE FOR BID

	REVISIONS	DATE	BY
1	ADDENDUM No. 3	12/7/25	

DESIGNED Designer
DRAWN Author
CHECKED Checker
APPROVED Approver

ONE INCH AT FULL SCALE. IF NOT, SCALE ACCORDINGLY
FILE NAME
JOB No. 21090
DATE DECEMBER 2025

6250 REGISTERED ARCHITECT
Alex E. Rolluda
STATE OF WASHINGTON

KITSAP COUNTY DEPT. OF PUBLIC WORKS
614 DIVISION STREET MS-26
PORT ORCHARD, WA 98366
TEL:(360) 337-5777 FAX:(360) 337-4867

Parametrix
ENGINEERING . PLANNING . ENVIRONMENTAL SCIENCES
719 SECOND AVENUE SE, SUITE 100 | SEATTLE, WA 98104
P 206.394.3700
WWW.PARAMETRIX.COM

PROJECT NAME
SILVERDALE RECYCLING AND GARBAGE FACILITY
KITSAP COUNTY, WASHINGTON

REFUSE SHED A FLOOR PLAN - LEVEL 1

DRAWING NO. OF
A20.22

ROOM FINISH SCHEDULE

ROOM		FLOOR		BASE	WALLS								CEILING		NOTES
					NORTH		EAST		SOUTH		WEST				
NUMBER	NAME	MATERIAL	FINISH		MATERIAL	FINISH	MATERIAL	FINISH	MATERIAL	FINISH	MATERIAL	FINISH	MATERIAL	FINISH	
101	CONTROL ROOM	CONCRETE	POLISHED, SEALED	RESILIENT BASE 6"	GWB	PT	GWB	PT	GWB	PT	GWB	PT	GYP BD	PT	
102	KITCHENETTE	CONCRETE	POLISHED, SEALED	RESILIENT BASE 6"	GWB	PT	GWB	PT	GWB	PT	GWB	PT	GYP BD	PT	
103	RESTROOM	CONCRETE	POLISHED, SEALED	FRP W/ RESILIENT BASE 6"	GWB	PT	GWB	PT	GWB	PT	GWB	PT	GYP BD	PT	
104	SERVER ROOM	CONCRETE	POLISHED, SEALED	RESILIENT BASE 6"	GWB	PT	GWB	PT	GWB	PT	GWB	PT	GYP BD	PT	
105	HALL	CONCRETE	POLISHED, SEALED	RESILIENT BASE 6"	GWB	PT	GWB	PT	GWB	PT	GWB	PT	GYP BD	PT	
106	STORAGE	CONCRETE	POLISHED, SEALED	RESILIENT BASE 6"	GWB	PT	GWB	PT	GWB	PT	GWB	PT	GYP BD	PT	
107	MECHANICAL LOFT	PLYWOOD	SEALED	NONE	GWB	-	GWB	-	GWB	-	GWB	-	NONE	-	

1

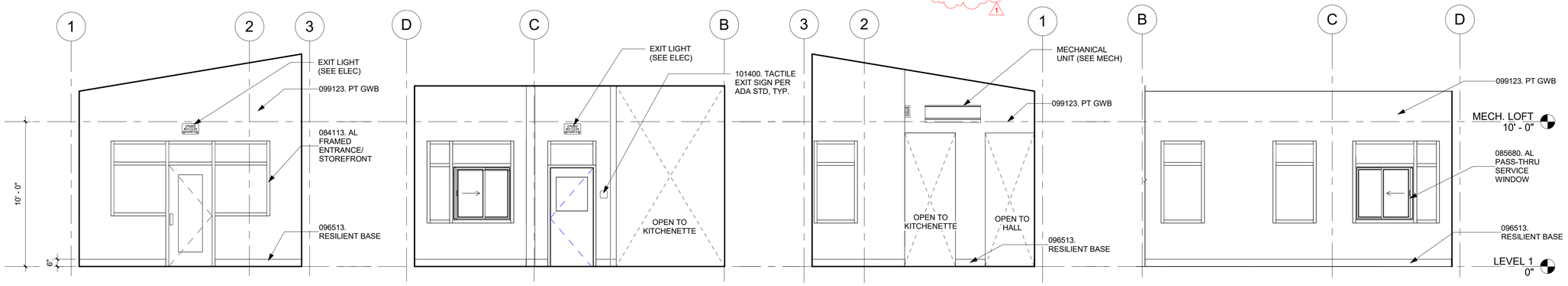

1 101 CONTROL RM - NORTH 1/4" = 1'-0" @ FULL SIZE

2 101 CONTROL RM - EAST 1/4" = 1'-0" @ FULL SIZE

3 101 CONTROL RM - SOUTH 1/4" = 1'-0" @ FULL SIZE

4 101 CONTROL RM - WEST 1/4" = 1'-0" @ FULL SIZE

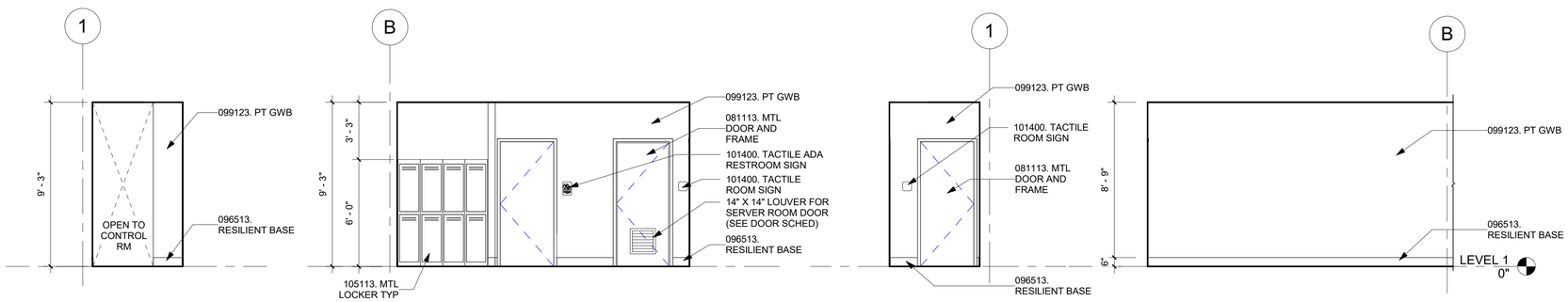

5 105 HALL - NORTH 1/4" = 1'-0" @ FULL SIZE

6 105 HALL - EAST 1/4" = 1'-0" @ FULL SIZE

7 105 HALL - SOUTH 1/4" = 1'-0" @ FULL SIZE

8 105 HALL - WEST 1/4" = 1'-0" @ FULL SIZE

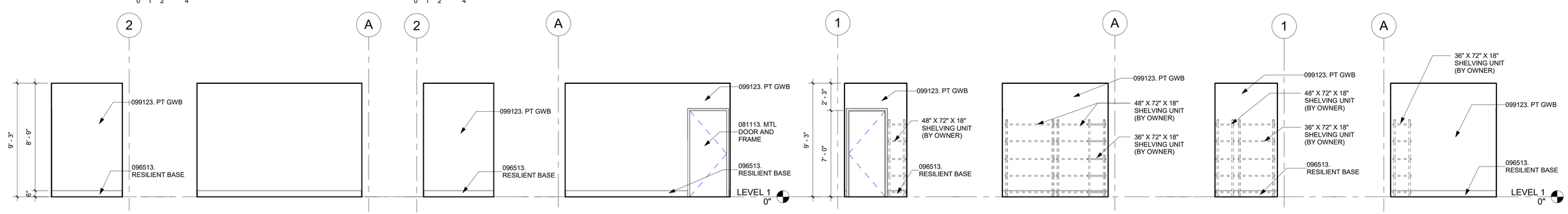

9 104 SERVER RM - NORTH 1/4" = 1'-0" @ FULL SIZE

10 104 SERVER RM - EAST 1/4" = 1'-0" @ FULL SIZE

11 104 SERVER RM - SOUTH 1/4" = 1'-0" @ FULL SIZE

12 104 SERVER RM - WEST 1/4" = 1'-0" @ FULL SIZE

13 106 STO - NORTH 1/4" = 1'-0" @ FULL SIZE

14 106 STO - EAST 1/4" = 1'-0" @ FULL SIZE

15 106 STO - SOUTH 1/4" = 1'-0" @ FULL SIZE

16 106 STO - WEST 1/4" = 1'-0" @ FULL SIZE

ISSUE FOR BID

	REVISIONS	DATE	BY
1	ADDENDUM No. 3	12/7/25	

DESIGNED SDF
DRAWN CR
CHECKED SDF
APPROVED SDF

ONE INCH AT FULL SCALE. IF NOT, SCALE ACCORDINGLY
FILE NAME
JOB No. 21090
DATE DECEMBER 2025

6250 REGISTERED ARCHITECT
Alex E. Rolluda
STATE OF WASHINGTON

KITSAP COUNTY DEPT. OF PUBLIC WORKS
614 DIVISION STREET MS-26
PORT ORCHARD, WA 98366
TEL:(360) 337-5777 FAX:(360) 337-4867

Parametrix
ENGINEERING . PLANNING . ENVIRONMENTAL SCIENCES
719 SECOND AVENUE SE, SUITE 100 | SEATTLE, WA 98104
P 206.394.3700
WWW.PARAMETRIX.COM

PROJECT NAME
SILVERDALE RECYCLING AND GARBAGE FACILITY REDEVELOPMENT
KITSAP COUNTY, WASHINGTON

ATTENDANT BUILDING INTERIOR ELEVATIONS & FINISH SCHEDULE

DRAWING NO. OF
A30.51

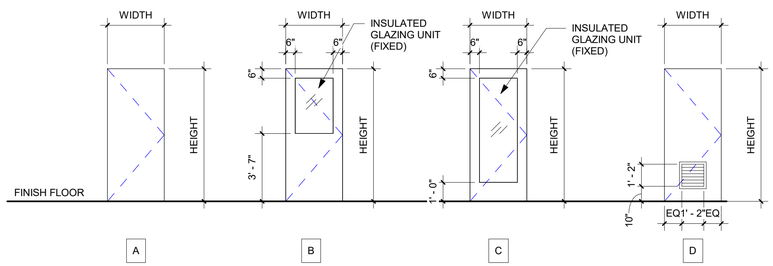

DOOR TYPES

1/4" = 1'-0" @ FULL SIZE

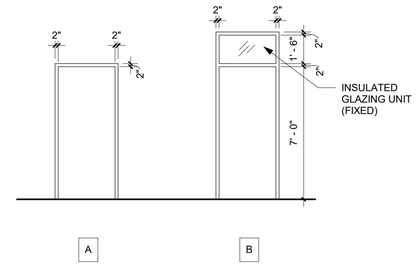

DOOR FRAME TYPES

1/4" = 1'-0" @ FULL SIZE

DOOR SCHEDULE

DOD	DOOR WIDTH	DOOR HEIGHT	DOOR THICKNESS	DOOR TYPE	DOOR MATERIAL	DOOR FINISH	DOOR FRAME TYPE	DOOR FRAME MATERIAL	DOOR FRAME FINISH	HARDWARE	COMMENTS
101A	3' - 0"	7' - 0"		C	ALUM	MFR ANOD		ALUM	MFR ANOD	SS	ENTRANCE DOOR: U FACTOR ≤ 0.60
101B	3' - 0"	7' - 0"	1 3/4"	B	HM	PT	B	HM	PT	SS	ENTRANCE DOOR: U FACTOR ≤ 0.60
102	3' - 0"	7' - 0"	1 3/4"	A	HM	PT	A	HM	PT	SS	
103	3' - 0"	7' - 0"	1 3/4"	D	HM	PT	A	HM	PT	SS	14" X 14" DOOR LOUVER, 10" ABOVE FLOOR
104	3' - 0"	7' - 0"	1 3/4"	A	HM	PT	A	HM	PT	SS	

DOOR NOTES:

1. FENESTRATION PRODUCTS SHALL BE LABELED WITH NFRC U-FACTORS, SHGC, VT AND LEAKAGE RATING, OR IF PRODUCTS DO NOT HAVE NFRC RATING, INDICATE APPLICABLE WSEC CHAPTER 3 DEFAULT VALUES.
2. ALL HOLLOW METAL DOORS ARE TO MEET THE SOUND-RESISTANT REQUIREMENTS OUTLINED IN 2.05 / SPEC SECTION 08 11 13.

WINDOW SCHEDULE

MARK	TYPE	DESCRIPTION	FRAMING MATL	GLAZING MATL	WIDTH	HEIGHT	SILL HEIGHT	HEAD HEIGHT	COMMENTS
101	B	FIXED	ALUM, MFR ANOD	ITG	3' - 0"	5' - 8"	3' - 0"	8' - 8"	PROVIDE ROLLER SHADE ON ALL GLASS WINDOWS.
102	B	FIXED	ALUM, MFR ANOD	ITG	3' - 0"	5' - 8"	3' - 0"	8' - 8"	
103	A	SLIDING W/ FIXED	ALUM, MFR ANOD	ITG	5' - 10"	5' - 8"	3' - 0"	8' - 8"	
104	D	FIXED W/ SWING DOOR	ALUM, MFR ANOD	ITG	11' - 0"	5' - 8"	3' - 0"	8' - 8"	
105	E	SLIDING W/ FIXED	ALUM, MFR ANOD	ITG	5' - 10"	5' - 8"	3' - 0"	8' - 8"	
106	B	FIXED	ALUM, MFR ANOD	ITG	3' - 0"	5' - 8"	3' - 0"	8' - 8"	
107	C	FIXED	ALUM, MFR ANOD	ITG	3' - 0"	5' - 4"	3' - 4"	8' - 8"	

ALL INSULATED GLASS UNITS MUST MEET THE FOLLOWING RATINGS:
U-FACTOR= 0.36 MAX.
SHGC= 0.38 MAX.
VT= 0.6

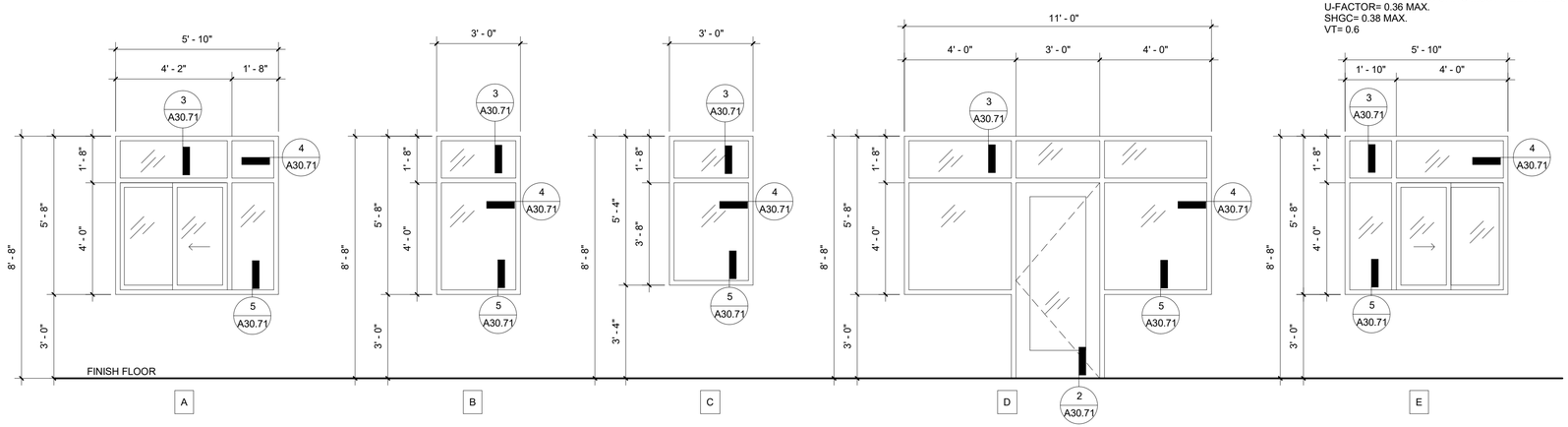

1 STOREFRONT / WINDOW TYPES

3/8" = 1'-0" @ FULL SIZE

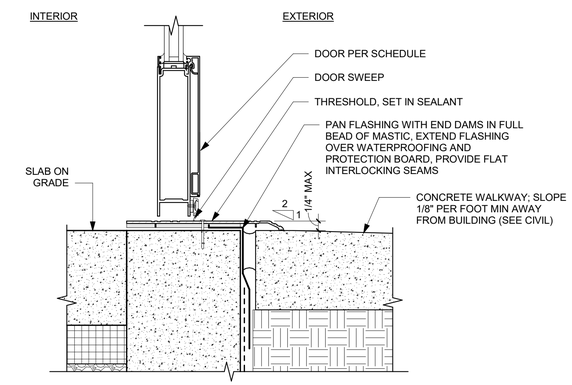

2 ALUMINUM DOOR THRESHOLD

3" = 1'-0" @ FULL SIZE

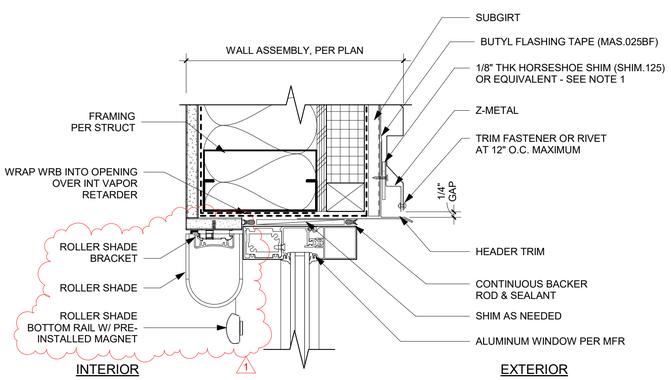

3 STOREFRONT HEAD

3" = 1'-0" @ FULL SIZE

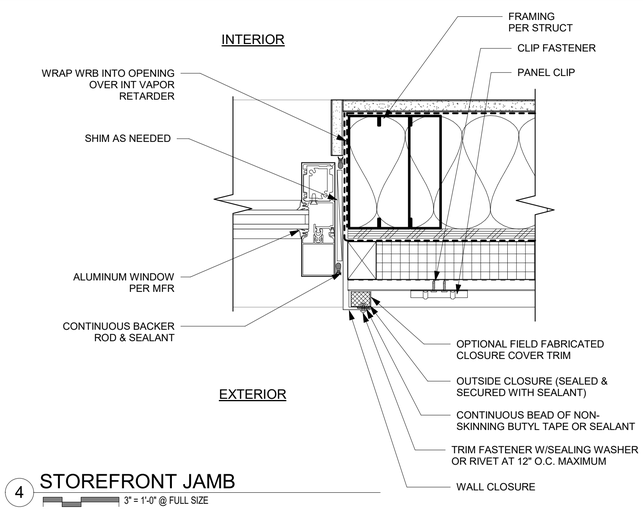

4 STOREFRONT JAMB

3" = 1'-0" @ FULL SIZE

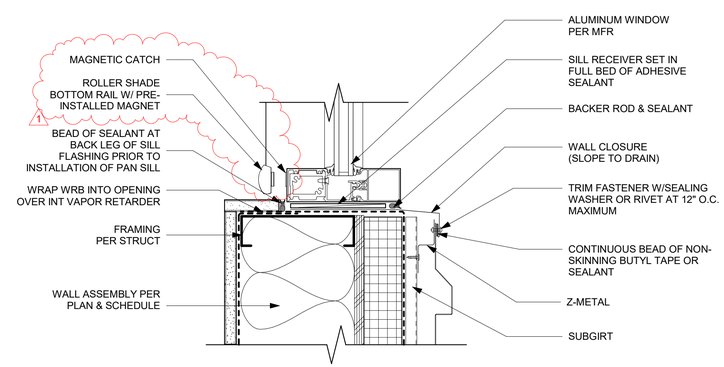

5 STOREFRONT SILL

3" = 1'-0" @ FULL SIZE

ISSUE FOR BID

	REVISIONS	DATE	BY
1	ADDENDUM No. 3	12/7/25	

DESIGNED SDF
DRAWN CR
CHECKED SDF
APPROVED SDF

ONE INCH AT FULL SCALE. IF NOT, SCALE ACCORDINGLY
FILE NAME
JOB No. 21090
DATE DECEMBER 2025

6250 REGISTERED ARCHITECT
Alex E. Rolluda
STATE OF WASHINGTON

KITSAP COUNTY DEPT. OF PUBLIC WORKS
614 DIVISION STREET MS-26
PORT ORCHARD, WA 98366
TEL:(360) 337-5777 FAX:(360) 337-4867

Parametrix
ENGINEERING . PLANNING . ENVIRONMENTAL SCIENCES
719 SECOND AVENUE SE, SUITE 100 | SEATTLE, WA 98104
P 206.394.3700
WWW.PARAMETRIX.COM

PROJECT NAME
SILVERDALE RECYCLING AND GARBAGE FACILITY REDEVELOPMENT
KITSAP COUNTY, WASHINGTON

ATTENDANT BUILDING WINDOW & DOOR TYPES AND SCHEDULES

DRAWING NO. OF
A30.71

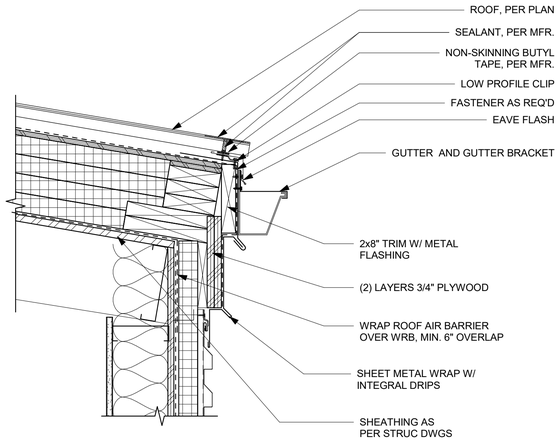

1 GUTTER EDGE

1 1/2" = 1'-0" @ FULL SIZE

0' 2" 4" 8"

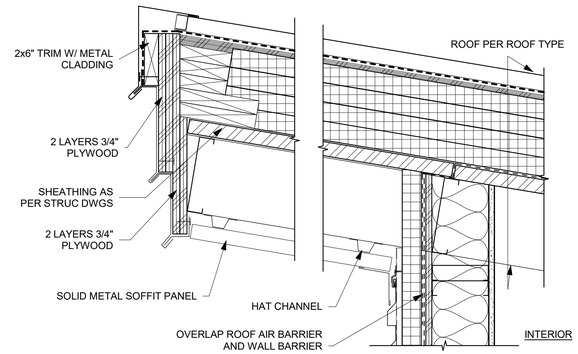

2 HIGH EAVE WITH SOFFIT

1 1/2" = 1'-0" @ FULL SIZE

0' 2" 4" 8"

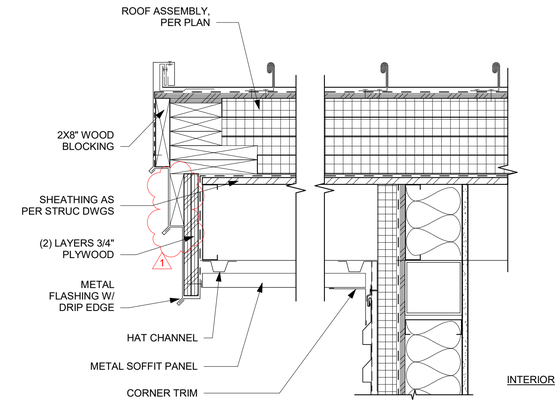

3 ROOF RAKE

1 1/2" = 1'-0" @ FULL SIZE

0' 2" 4" 8"

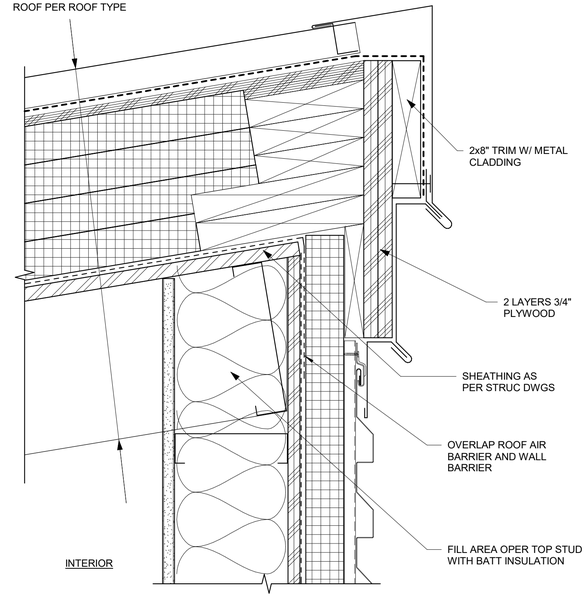

4 HIGH EAVE NO SOFFIT

3" = 1'-0" @ FULL SIZE

0' 1" 2" 4"

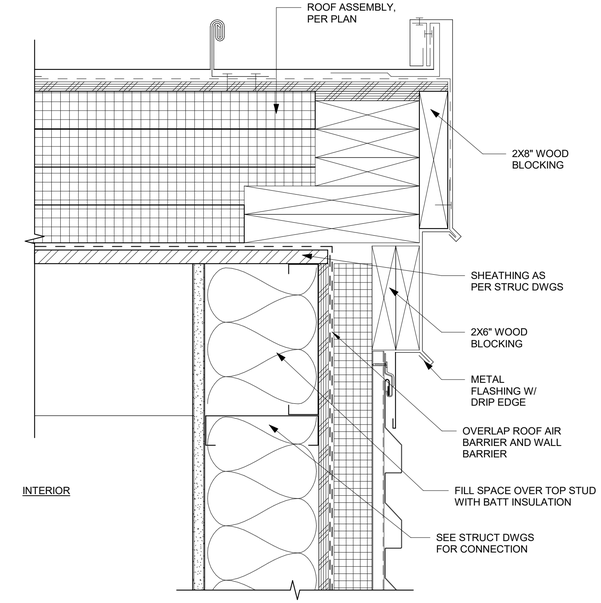

5 ROOF RAKE NO EAVE

3" = 1'-0" @ FULL SIZE

0' 1" 2" 4"

ISSUE FOR BID

	REVISIONS	DATE	BY
1	ADDENDUM No. 3	12/7/25	

DESIGNED SDF
DRAWN CR
CHECKED SDF
APPROVED SDF

ONE INCH AT FULL SCALE. IF NOT, SCALE ACCORDINGLY

FILE NAME

JOB No. 21090

DATE DECEMBER 2025

6250 REGISTERED ARCHITECT
Alex E. Rolluda
STATE OF WASHINGTON

KITSAP COUNTY
DEPT. OF PUBLIC WORKS
614 DIVISION STREET MS-26
PORT ORCHARD, WA 98366
TEL:(360) 337-5777 FAX:(360) 337-4867

Parametrix
ENGINEERING . PLANNING . ENVIRONMENTAL SCIENCES
719 SECOND AVENUE SE, SUITE 100 | SEATTLE, WA 98104
P 206.394.3700
WWW.PARAMETRIX.COM

PROJECT NAME

SILVERDALE RECYCLING AND GARBAGE FACILITY REDEVELOPMENT
KITSAP COUNTY, WASHINGTON

ATTENDANT BUILDING DETAILS

DRAWING NO. OF

A30.82

ROOF TYPE	MATERIAL	DESCRIPTION
RF-1 (HEATED SPACE BELOW)	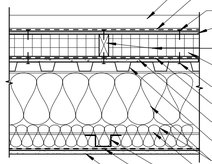	STANDING SEAM METAL ROOF ICE & WATER SHIELD SHOWN DASHED SEE STRUCTURAL NOTE FOR FASTENING AND SPACING 1/2" PLYWOOD SUBSTRATE 2" x 4" PT WOOD BLOCKING G (SEE 2 / A40.22 FOR LAYOUT & SPACING) 3" RIGID INSULATION (R-15), @1" = R-5 (NO INSULATION ON EAVES)* SEE STRUCTURAL NOTE FOR FASTENING AND SPACING AIR BARRIER, 0.1 TO 1.0 PERMS REQUIRED 1/2" CEMENTITIOUS BACKING BOARD METAL ROOF DECK PER STRUCTURAL 8-1/4" BATT INSULATION (R-25) AND 3-1/2" BATT INSULATION (R-11) Wx STEEL BEAM BEYOND, PER STRUCTURAL 2" FURRING CHANNEL VAPOR RETARDER 5/8" GYPSUM BOARD
RF-2 (UNHEATED SPACE BELOW)	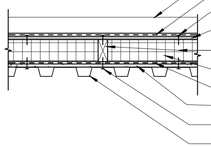	STANDING SEAM METAL ROOF ICE & WATER SHIELD SHOWN DASHED SEE STRUCTURAL NOTE FOR FASTENING AND SPACING 1/2" PLYWOOD SUBSTRATE 2" x 4" PT WOOD BLOCKING (SEE 2 / A40.22 FOR LAYOUT & SPACING) 3" RIGID INSULATION (R-15), @1" = R-5 (NO INSULATION ON EAVES)* AIR BARRIER, 0.1 TO 1.0 PERMS REQUIRED 1/2" CEMENTITIOUS BACKING BOARD SEE STRUCTURAL NOTE FOR FASTENING AND SPACING METAL ROOF DECK PER STRUCTURAL

*IF MORE THAN (1)-LAYER OF RIGID INSULATION PANELS ARE USED, PANELS JOINTS MUST BE STAGGERED AT ROOF

1

FLOOR TYPE	MATERIAL	DESCRIPTION
FL-1	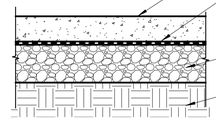	CONCRETE SLAB PER STRUCTURAL VAPOR BARRIER SHOWN DASHED GRAVEL BASE PER STRUCTURAL COMPACTED EARTH PER STRUCTURAL
FL-2	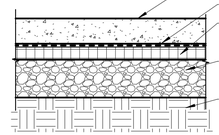	CONCRETE SLAB PER STRUCTURAL VAPOR RETARDER SHOWN DASHED 2" RIGID INSULATION, R-10 (WHERE APPLICABLE) GRAVEL BASE PER STRUCTURAL COMPACTED EARTH PER STRUCTURAL

INTERIOR WALL TYPE	MATERIAL	DESCRIPTION
4S2	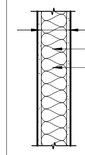	(1) LAYER 5/8" GYPSUM WALL BOARD EACH SIDE 6" (6) STEEL STUD FRAMING 3 1/2" SOUND ATTENUATOR, STC-50 (FULLY-FILL SPACE SPACES)

EXTERIOR WALL TYPE	MATERIAL	DESCRIPTION
6SM1	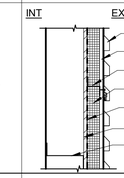	AEP SPAN PC-10 METAL PANEL HORIZONTAL SIDING OR EQUAL VERT. SUBGIRT, PER MANUF. HORIZ. Z-GIRT, PER MANUF. 2" RIGID INSULATION, R-10 CONTINUOUS WEATHER-RESISTANT BARRIER (WRB), 0.1 TO 1.0 PERMS REQUIRED PLYWOOD SHEATHING PER STRUCTURAL STEEL GIRT PER STRUCTURAL
6SM2	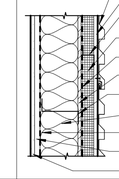	AEP SPAN PC-10 METAL PANEL HORIZONTAL SIDING OR EQUAL VERT. SUBGIRT, PER MANUF. HORIZ. Z-GIRT, PER MANUF. 2" RIGID INSULATION, R-10 CONTINUOUS WEATHER-RESISTANT BARRIER (WRB), 0.1 TO 1.0 PERMS REQUIRED PLYWOOD SHEATHING PER STRUCTURAL 6" STEEL GIRT PER STRUCTURAL 6" BATT INSULATION, R-24 (FULLY FILL SPACE) VAPOR RETARDER, SHOWN DASHED 7/8" FURRING CHANNEL 1 5/8" GYPSUM WALL BOARD
6SM3 1-HOUR FIRE-RATED SEPARATION	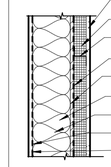	1/2" CEMENT BOARD (GARAGE SIDE) 2" RIGID INSULATION, R-10 HORIZ. Z-GIRT WEATHER-RESISTANT BARRIER (WRB), 0.1 TO 1.0 PERMS REQUIRED PLYWOOD SHEATHING PER STRUCTURAL 6" METAL STUD FRAMING PER STRUCTURAL 6" BATT INSULATION, R-24 (FULLY FILL SPACE) VAPOR RETARDER, SHOWN DASHED 5/8" GYPSUM WALL BOARD (TYPE X)
4SM1	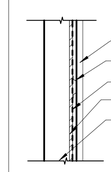	AEP SPAN PC-10 METAL PANEL HORIZONTAL SIDING OR EQUAL SUBGIRT WEATHER-RESISTANT BARRIER (WRB) PLYWOOD SHEATHING PER STRUCTURAL 4" METAL STUD FRAMING PER SRUCTURAL
C01	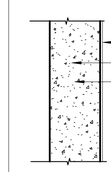	FLUID APPLIED CONCRETE WATERPROOFING CAST-IN-PLACE CONCRETE PER PLAN (SEE STRL) REINFORCEMENT PER STRUCTURAL
C02	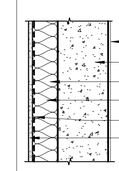	FLUID APPLIED CONCRETE WATERPROOFING CAST-IN-PLACE RETAINING WALL PER PLAN (SEE STRL) 4" METAL STUD FRAMING 3 1/2" BATT INSULATION, R-11 (FULLY FILL SPACE) VAPOR RETARDER 5/8" GYPSUM WALL BOARD

ISSUE FOR BID

	REVISIONS	DATE	BY
1	ADDENDUM No. 3	12/7/25	

DESIGNED Designer
DRAWN Author
CHECKED Checker
APPROVED Approver

ONE INCH AT FULL SCALE. IF NOT, SCALE ACCORDINGLY
FILE NAME
JOB No.
DATE DECEMBER 2025

6250 REGISTERED ARCHITECT Alex E. Rolluda STATE OF WASHINGTON

KITSAP COUNTY DEPT. OF PUBLIC WORKS
614 DIVISION STREET MS-26
PORT ORCHARD, WA 98366
TEL:(360) 337-5777 FAX:(360) 337-4867

Parametrix
ENGINEERING . PLANNING . ENVIRONMENTAL SCIENCES
719 SECOND AVENUE SE, SUITE 100 | SEATTLE, WA 98104
P 206.394.3700
WWW.PARAMETRIX.COM

PROJECT NAME
SILVERDALE RECYCLING AND GARBAGE FACILITY REDEVELOPMENT
KITSAP COUNTY, WASHINGTON

LHHW BUILDING ASSEMBLY TYPES

DRAWING NO. OF
A40.03

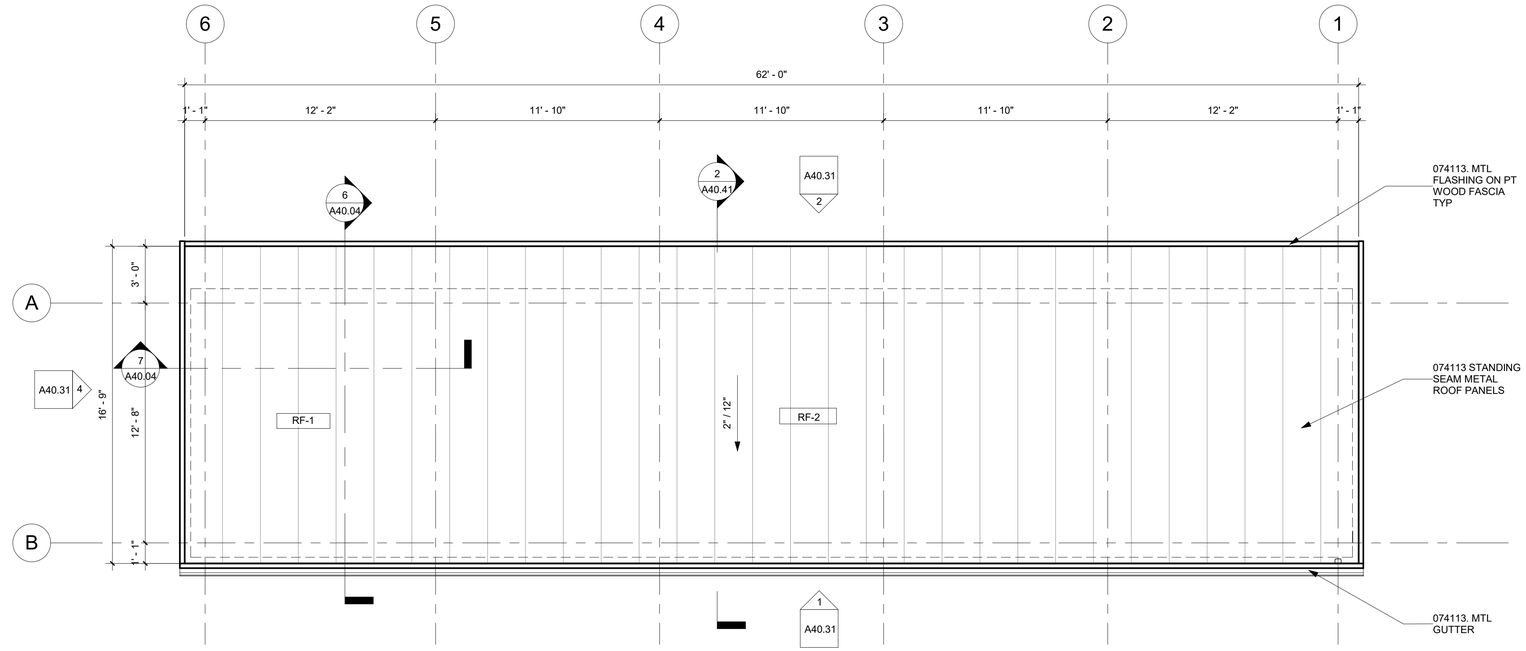

1 ROOF PLAN

1/4" = 1'-0" @ FULL SIZE

0' 1' 2' 4'

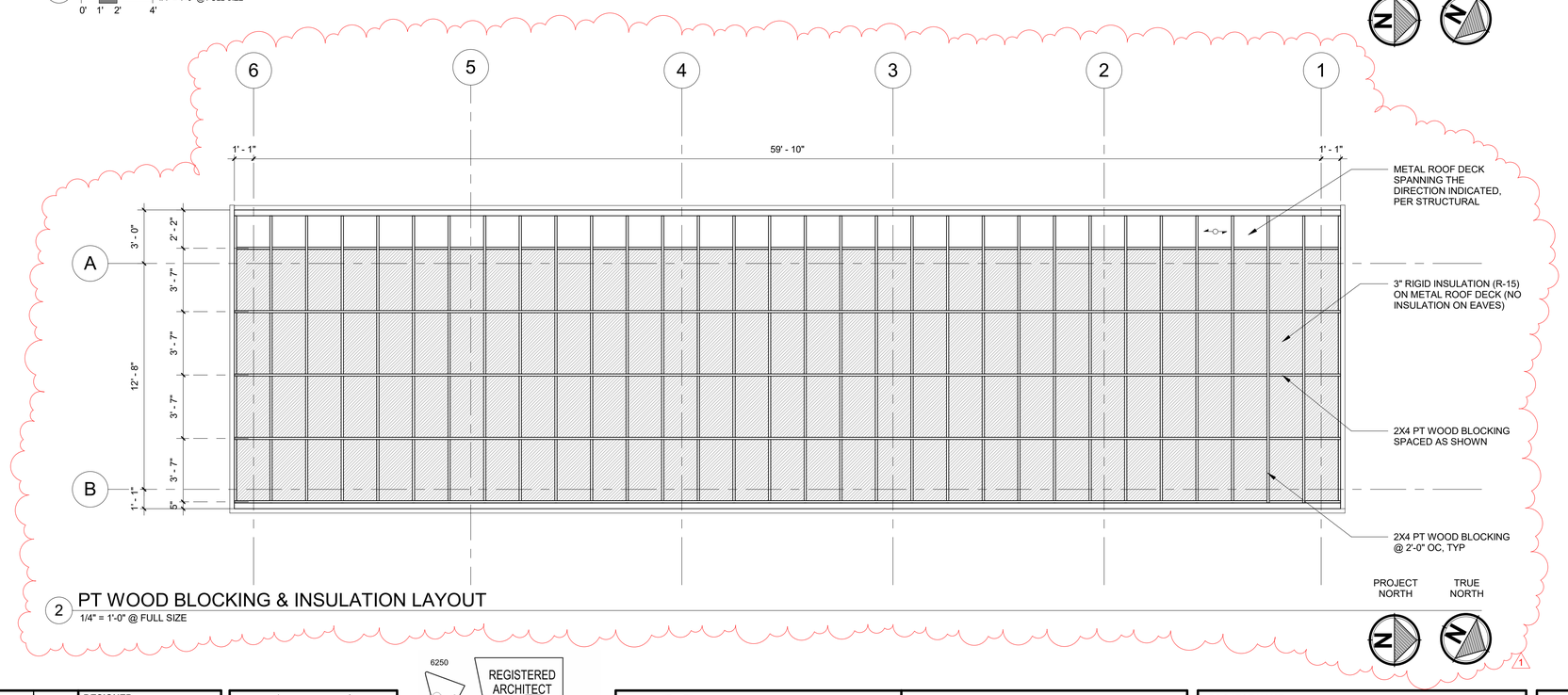

2 PT WOOD BLOCKING & INSULATION LAYOUT

1/4" = 1'-0" @ FULL SIZE

ISSUE FOR BID

	REVISIONS	DATE	BY
1	ADDENDUM No. 3	12/7/25	

DESIGNED Designer
DRAWN Author
CHECKED Checker
APPROVED Approver

ONE INCH AT FULL SCALE. IF NOT, SCALE ACCORDINGLY
FILE NAME
JOB No.
DATE DECEMBER 2025

6250
REGISTERED ARCHITECT
Alex E. Rolluda
STATE OF WASHINGTON

KITSAP COUNTY
DEPT. OF PUBLIC WORKS
614 DIVISION STREET MS-26
PORT ORCHARD, WA 98366
TEL:(360) 337-5777 FAX:(360) 337-4867

Parametrix
ENGINEERING . PLANNING . ENVIRONMENTAL SCIENCES
719 SECOND AVENUE SE, SUITE 100 | SEATTLE, WA 98104
P 206.394.3700
WWW.PARAMETRIX.COM

PROJECT NAME
SILVERDALE RECYCLING AND GARBAGE FACILITY REDEVELOPMENT
KITSAP COUNTY, WASHINGTON

LHHW BUILDING ROOF PLAN

DRAWING NO. OF
A40.22

ROOM FINISH SCHEDULE

ROOM		FLOOR		BASE	WALLS								CEILING		NOTES
					NORTH		EAST		SOUTH		WEST				
NUMBER	NAME	MATERIAL	FINISH		MATERIAL	FINISH	MATERIAL	FINISH	MATERIAL	FINISH	MATERIAL	FINISH	MATERIAL	FINISH	
101	GARAGE	CONC	HARD TROWEL, SEALED	FRP W/ RESILIENT BASE 6" (SOUTH SIDE ONLY)	EXP PLYWOOD SHEATHING	-	EXP PLYWOOD SHEATHING	-	CEMENT BD	PT	EXP PLYWOOD SHEATHING	-	EXP MTL DECK		
102	WARMING ROOM	CONC	POLISHED, SEALED	RESILIENT BASE 6"/ PT CONC CURB	GWB	PT	GWB	PT	GWB	PT	GWB	PT	EXP MTL DECK		
103	STORAGE	CONC	POLISHED, SEALED	RESILIENT BASE 6"/PT CONC CURB	GWB	PT	GWB	PT	GWB	PT	GWB	PT	EXP MTL DECK		

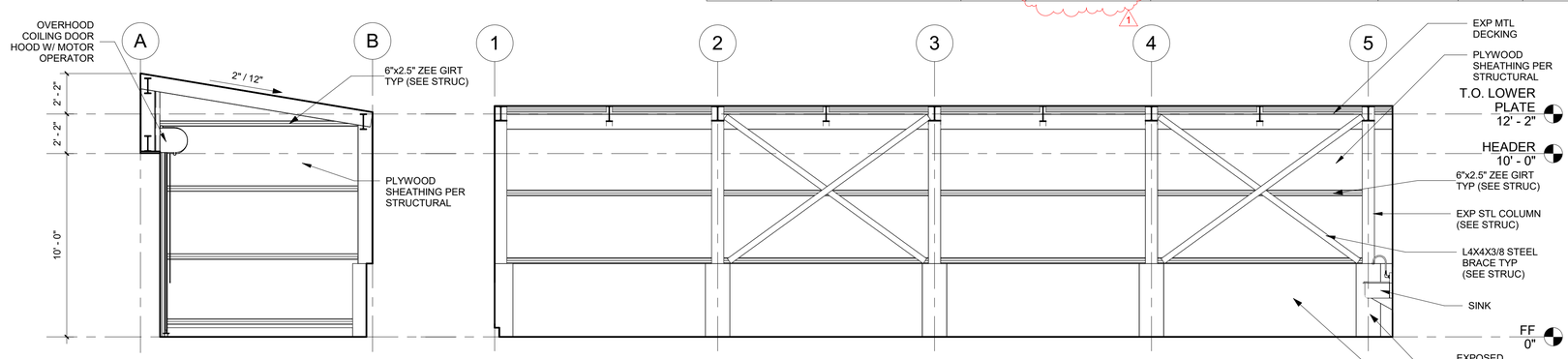

1 101 GARAGE - NORTH
1/4" = 1'-0" @ FULL SIZE
0' 1' 2' 4'

2 101 GARAGE - EAST
1/4" = 1'-0" @ FULL SIZE
0' 1' 2' 4'

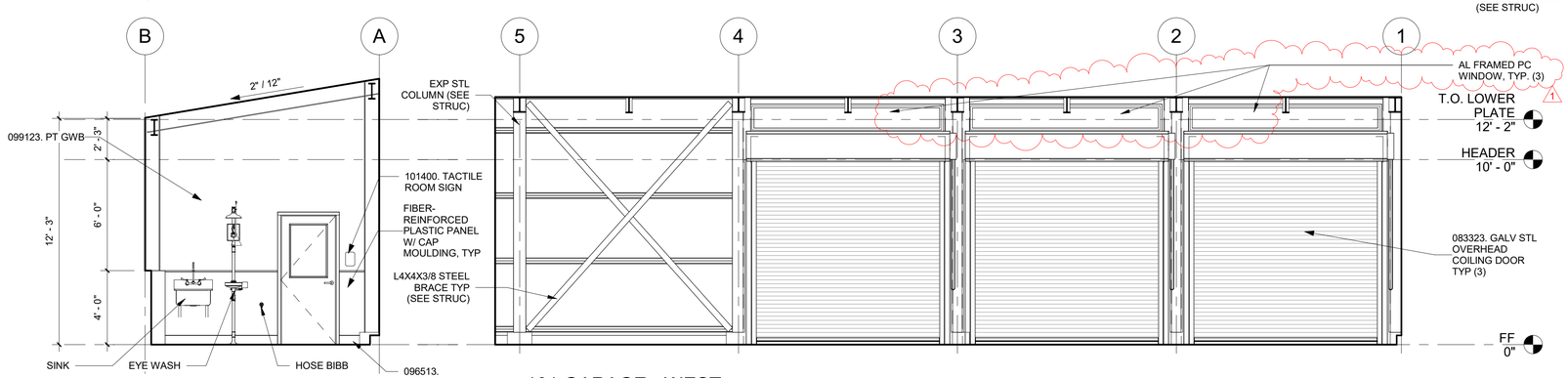

3 101 GARAGE - SOUTH
1/4" = 1'-0" @ FULL SIZE
0' 1' 2' 4'

4 101 GARAGE - WEST
1/4" = 1'-0" @ FULL SIZE
0' 1' 2' 4'

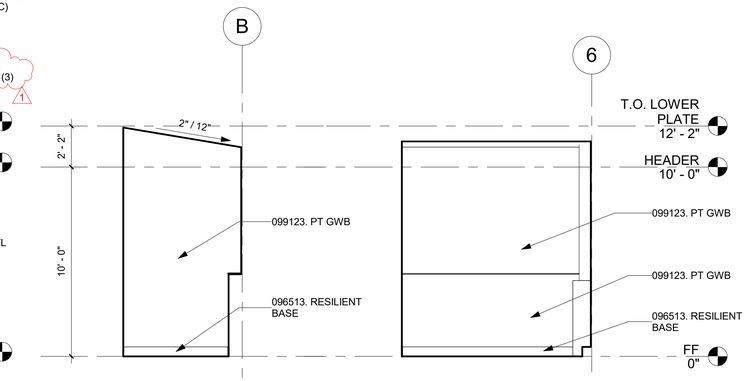

5 103 STORAGE - NORTH
1/4" = 1'-0" @ FULL SIZE
0' 1' 2' 4'

6 103 STORAGE - EAST
1/4" = 1'-0" @ FULL SIZE
0' 1' 2' 4'

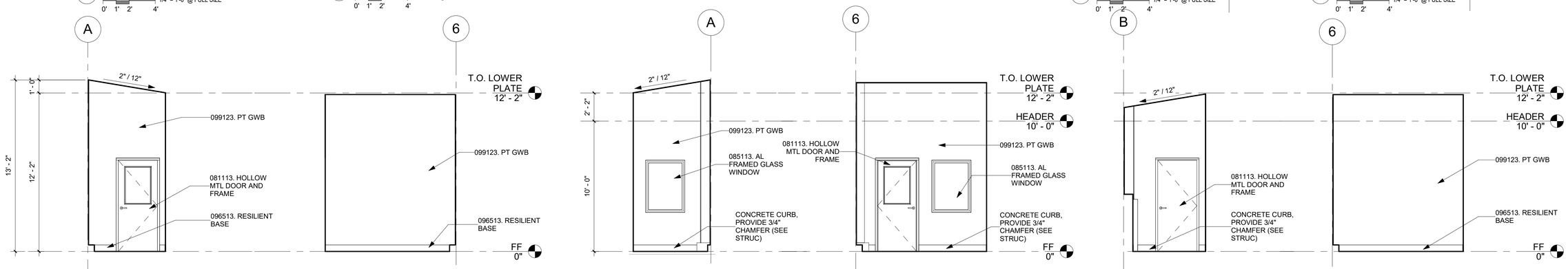

7 102 WARMING RM. - NORTH
1/4" = 1'-0" @ FULL SIZE
0' 1' 2' 4'

8 102 WARMING ROOM - EAST
1/4" = 1'-0" @ FULL SIZE
0' 1' 2' 4'

9 102 WARMING ROOM - SOUTH
1/4" = 1'-0" @ FULL SIZE
0' 1' 2' 4'

10 102 WARMING ROOM - WEST
1/4" = 1'-0" @ FULL SIZE
0' 1' 2' 4'

11 103 STORAGE - SOUTH
1/4" = 1'-0" @ FULL SIZE
0' 1' 2' 4'

12 103 STORAGE - WEST
1/4" = 1'-0" @ FULL SIZE
0' 1' 2' 4'

ISSUE FOR BID

	REVISIONS	DATE	BY
1	ADDENDUM No. 3	12/7/25	

DESIGNED Designer
DRAWN Author
CHECKED Checker
APPROVED Approver

ONE INCH AT FULL SCALE. IF NOT, SCALE ACCORDINGLY
FILE NAME
JOB No.
DATE DECEMBER 2025

6250 REGISTERED ARCHITECT
Alex E. Rolluda
STATE OF WASHINGTON

KITSAP COUNTY DEPT. OF PUBLIC WORKS
614 DIVISION STREET MS-26
PORT ORCHARD, WA 98366
TEL(360) 337-5777 FAX(360) 337-4867

Parametrix
ENGINEERING . PLANNING . ENVIRONMENTAL SCIENCES
719 SECOND AVENUE SE, SUITE 100 | SEATTLE, WA 98104
P 206.394.3700
WWW.PARAMETRIX.COM

PROJECT NAME
SILVERDALE RECYCLING AND GARBAGE FACILITY REDEVELOPMENT
KITSAP COUNTY, WASHINGTON

LHHW BUILDING INTERIOR ELEVATIONS

DRAWING NO. OF
A40.51

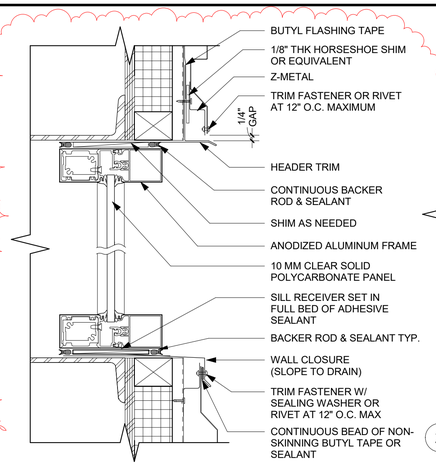

1 POLYCARBONATE WINDOW HEADER/SILL

3" = 1'-0" @ FULL SIZE

0' 1" 2" 4"

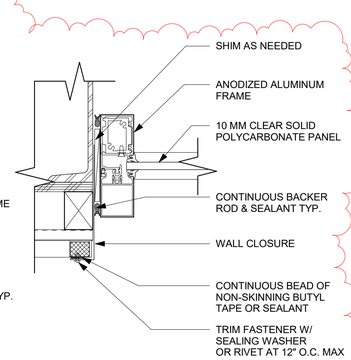

2 POLYCARBONATE WINDOW JAMB

3" = 1'-0" @ FULL SIZE

0' 1" 2" 4"

DOOR SCHEDULE

	DOOR				DOOR PANEL				DOOR FRAME				
MARK	WIDTH	HEIGHT	THICKNESS	FIRE RATING	TYPE	MATERIAL	FINISH	Glass Type	TYPE	MATERIAL	FINISH	HARDWARE	COMMENTS
FF													
101	3' - 0"	7' - 0"	1 3/4"		A	HM	PT		A	HM	PT	SS	SWINGING OPAQUE DOOR: U FACTOR ≤ 0.37
102	3' - 0"	7' - 0"	1 3/4"		B	HM	PT	IT	A	HM	PT	SS	ENTRANCE DOOR: U FACTOR ≤ 0.60
103	3' - 0"	7' - 0"	1 3/4"		B	HM	PT	IT	A	HM	PT	SS	ENTRANCE DOOR: U FACTOR ≤ 0.60
104	11' - 0"	11' - 6"	PER MFR.		C	GS	PC		B	STS	PC	PER MFR.	W/ GALV STL COIL HOOD & MANUAL CONTROLGARD CHAIN HOIST
105	11' - 0"	11' - 6"	PER MFR.		C	GS	PC		B	STS	PC	PER MFR.	W/ GALV STL COIL HOOD & MANUAL CONTROLGARD CHAIN HOIST
106	11' - 0"	11' - 6"	PER MFR.		C	GS	PC		B	STS	PC	PER MFR.	W/ GALV STL COIL HOOD & MANUAL CONTROLGARD CHAIN HOIST

DOOR NOTES:
1. CURTAIN SLATS OF OVERHEAD COILING DOOR SHALL BE GALVANIZED STEEL, NO.5, GRADE 40 STEEL ASTM A 653 GALVANIZED STEEL ZINC COATING, MINIMUM GA 22.
2. PROVIDE THE FOLLOWING WEATHERSTRIPPING FOR THE OVERHEAD COILING DOORS:
- BOTTOM BAR: REPLACEABLE, BULB-STYLE, COMPRESSIBLE EDPM GASKET EXTENDING INTO GUIDES
- GUIDES: VINYL STRIP SEALING AGAINST FASCIA SIDE OF CURTAIN
- HOOD: NEOPRENE/RAYON BAFFLE TO IMPEDE AIR FLOW ABOVE COIL
- LINTEL SEAL: NYLON BRUSH SEAL FITTED AT DOOR HEADER TO IMPEDE AIR FLOW
3. ALL HOLLOW METAL DOORS ARE TO MEET THE SOUND-RESISTANT REQUIREMENTS OUTLINED IN 2.05 / SPEC SECTION 08 11 13.

GLAZING NOTES:
ALL INSULATED GLASS UNITS MUST MEET THE FOLLOWING RATINGS:
U-FACTOR= 0.36 MAX.
SHGC= 0.38 MAX.
VT= 0.6

DOOR & WINDOW MATERIAL & FINISH LEGEND

MATERIAL KEY	
AL	ALUMINUM
GS	GALVANIZED STEEL
HM	HOLLOW METAL
STS	STRUCTURAL STEEL
SS	STAINLESS STEEL
I	INSULATED
T	TEMPERED
FINISH KEY	
PC	POWDER COATED
PT	PAINTED

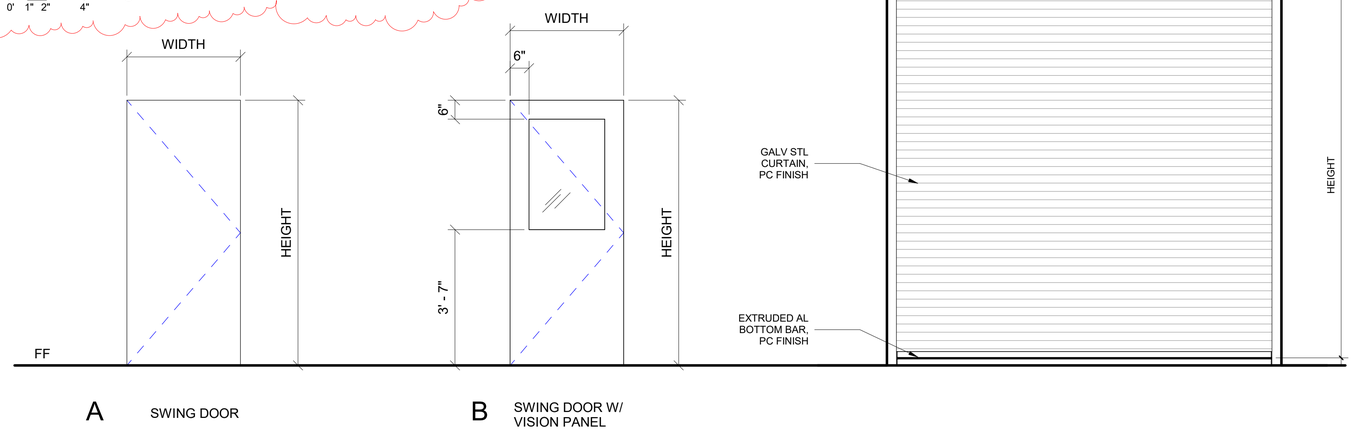

DOOR TYPES

1/2" = 1'-0" @ FULL SIZE

0' 6" 1' 2'

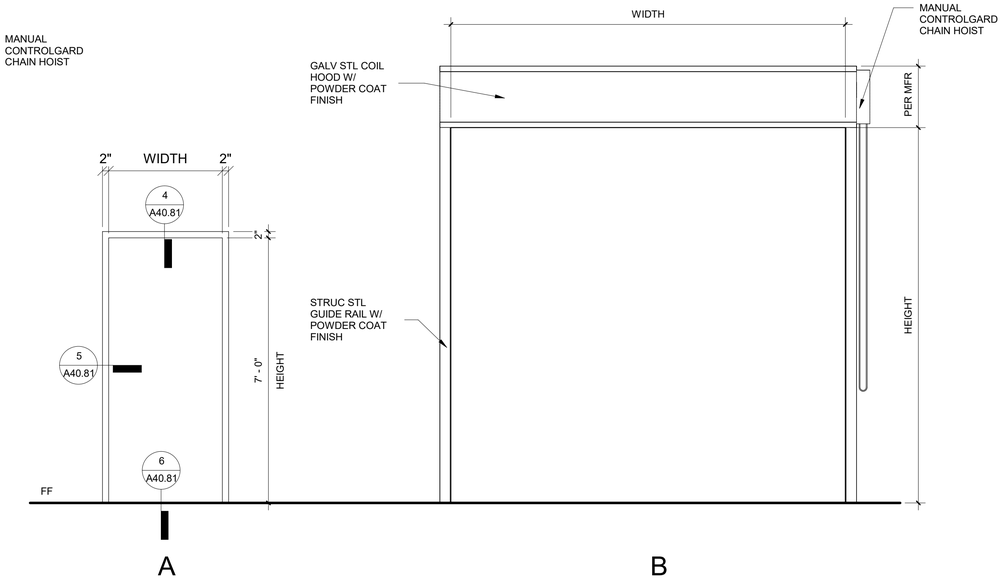

FRAME TYPES

1/2" = 1'-0" @ FULL SIZE

0' 6" 1' 2'

WINDOW SCHEDULE

Mark	Window Type	Description	Frame Material	Glazing	Width	Height	Sill Height	Head Height	Comments
101	A	FIXED	AL, MFR ANOD	IT	3' - 0"	4' - 0"	3' - 0"	7' - 0"	PROVIDE ROLLER SHADE
102	A	FIXED	AL, MFR ANOD	IT	3' - 0"	4' - 0"	3' - 0"	7' - 0"	PROVIDE ROLLER SHADE
103	B	FIXED	AL, MFR ANOD	PC	10' - 6"	1' - 6"	11' - 6"	13' - 0"	
104	B	FIXED	AL, MFR ANOD	PC	10' - 6"	1' - 6"	11' - 6"	13' - 0"	
105	B	FIXED	AL, MFR ANOD	PC	10' - 6"	1' - 6"	11' - 6"	13' - 0"	

WINDOW NOTES:
ALL INSULATED GLASS UNITS MUST MEET THE FOLLOWING RATINGS:
U-FACTOR= 0.36 MAX.
SHGC= 0.38 MAX.
VT= 0.6

FENESTRATION PRODUCTS SHALL BE LABELED WITH NFRC U-FACTORS, SHGC, VT AND LEAKAGE RATING, OR IF PRODUCTS DO NOT HAVE NFRC RATING, INDICATE APPLICABLE WSEC CHAPTER 3 DEFAULT VALUES

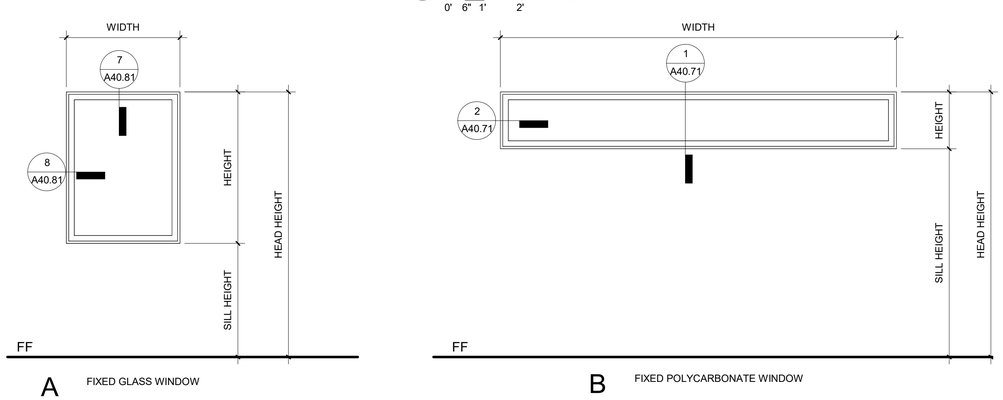

WINDOW TYPES

1/2" = 1'-0" @ FULL SIZE

0' 6" 1' 2'

ISSUE FOR BID

	REVISIONS	DATE	BY
1	ADDENDUM No. 3	12/7/25	

DESIGNED Designer
DRAWN LGC
CHECKED Checker
APPROVED Approver

ONE INCH AT FULL SCALE. IF NOT, SCALE ACCORDINGLY
FILE NAME
JOB No.
DATE DECEMBER 2025

6250 REGISTERED ARCHITECT
Alex E. Rolluda
STATE OF WASHINGTON

KITSAP COUNTY
DEPT. OF PUBLIC WORKS
614 DIVISION STREET MS-26
PORT ORCHARD, WA 98366
TEL:(360) 337-5777 FAX:(360) 337-4867

Parametrix
ENGINEERING . PLANNING . ENVIRONMENTAL SCIENCES
719 SECOND AVENUE SE, SUITE 100 | SEATTLE, WA 98104
P 206.394.3700
WWW.PARAMETRIX.COM

PROJECT NAME
SILVERDALE RECYCLING AND GARBAGE FACILITY REDEVELOPMENT
KITSAP COUNTY, WASHINGTON

LHHW BUILDING DOOR & WINDOW TYPES AND SCHEDULE

DRAWING NO. OF
A40.71

ROOM FINISH SCHEDULE

ROOM		FLOOR		BASE	WALLS								CEILING		NOTES
					NORTH		EAST		SOUTH		WEST				
NUMBER	NAME	MATERIAL	FINISH		MATERIAL	FINISH	MATERIAL	FINISH	MATERIAL	FINISH	MATERIAL	FINISH	MATERIAL	FINISH	
101	OPERATOR WARMING	CONC	POLISHED, SEALED	RB, FRP	GWB	PT	GWB	PT	GWB	PT	GWB	PT	GYP	PT	
102	STORAGE	CONC	POLISHED, SEALED	RB	GWB	PT	GWB	PT	GWB	PT	GWB	PT	GYP	PT	

1

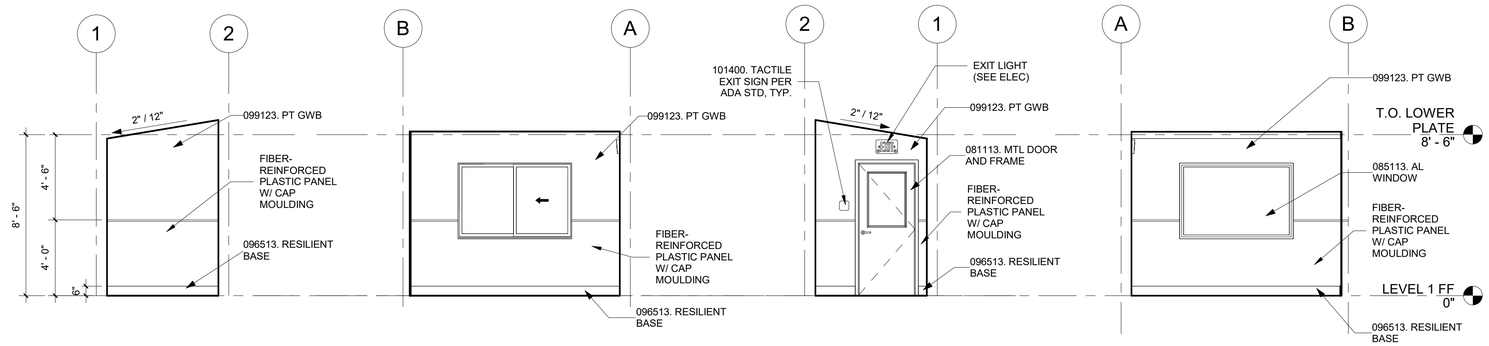

1 WARMING RM NORTH ELEV
1/4" = 1'-0" @ FULL SIZE

2 WARMING RM EAST ELEV
1/4" = 1'-0" @ FULL SIZE

3 WARMING RM SOUTH ELEV
1/4" = 1'-0" @ FULL SIZE

4 WARMING RM WEST ELEV
1/4" = 1'-0" @ FULL SIZE

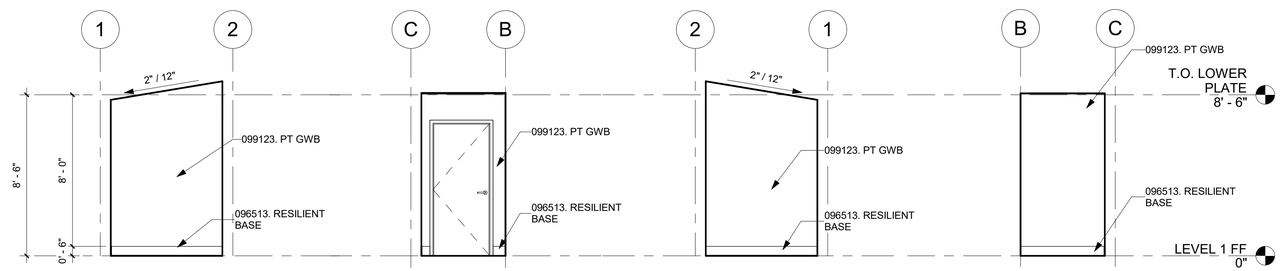

5 STO NORTH ELEV
1/4" = 1'-0" @ FULL SIZE

6 STO EAST ELEV
1/4" = 1'-0" @ FULL SIZE

7 STO SOUTH ELEV
1/4" = 1'-0" @ FULL SIZE

8 STO WEST ELEV
1/4" = 1'-0" @ FULL SIZE

ISSUE FOR BID

	REVISIONS	DATE	BY
1	ADDENDUM No. 3	12/7/25	

DESIGNED Designer
DRAWN Author
CHECKED Checker
APPROVED Approver

ONE INCH AT FULL SCALE. IF NOT, SCALE ACCORDINGLY
FILE NAME
JOB No. 21090
DATE DECEMBER 2025

6250 REGISTERED ARCHITECT
Alex E. Rolluda
STATE OF WASHINGTON

KITSAP COUNTY
DEPT. OF PUBLIC WORKS
614 DIVISION STREET MS-26
PORT ORCHARD, WA 98366
TEL:(360) 337-5777 FAX:(360) 337-4867

Parametrix
ENGINEERING . PLANNING . ENVIRONMENTAL SCIENCES
719 SECOND AVENUE SE, SUITE 100 | SEATTLE, WA 98104
P 206.394.3700
WWW.PARAMETRIX.COM

PROJECT NAME
SILVERDALE RECYCLING AND GARBAGE FACILITY REDEVELOPMENT
KITSAP COUNTY, WASHINGTON

OPERATOR WARMING STATION INTERIOR ELEVATIONS AND FINISH SCHEDULE

DRAWING NO. OF
A50.51

DOOR & WINDOW MATERIAL & FINISH LEGEND

MATERIAL KEY	
AL	ALUMINUM
ANOD	ANODIZED
HM	HOLLOW METAL
SS	STAINLESS STEEL
I	INSULATED
T	TEMPERED
FINISH KEY	
PC	POWDER COATED
PT	PAINTED

DOOR SCHEDULE

DOOR					DOOR PANEL				DOOR FRAME				
MARK	WIDTH	HEIGHT	THICKNESS	FIRE RATING	TYPE	MATERIAL	FINISH	Glass Type	TYPE	MATERIAL	FINISH	HARDWARE	COMMENTS
LEVEL 1 FF													
101	3' - 0"	7' - 0"	1 3/4"	-	A	HM	PT	IT	A	HM	PT	SS	ENTRANCE DOOR: U FACTOR ≤ 0.60
102	3' - 0"	7' - 0"	1 3/4"	-	B	HM	PT		A	HM	PT	SS	SWINGING OPAQUE DOOR: U FACTOR ≤ 0.37

ALL HOLLOW METAL DOORS ARE TO MEET THE SOUND-RESISTANT REQUIREMENTS OUTLINED IN 2.05 / SPEC SECTION 08 11 13. 1

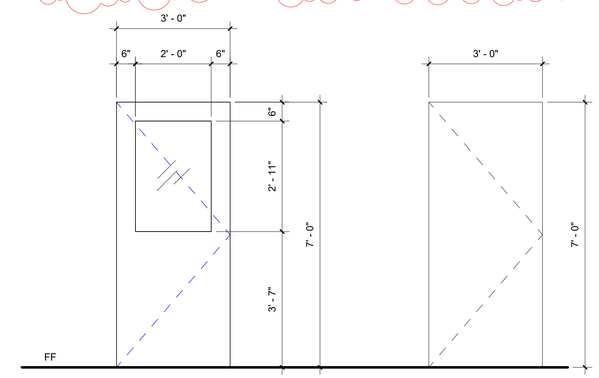

A METAL SWING DOOR WITH VISION GLASS PANEL

B METAL SWING DOOR

DOOR TYPES

1/2" = 1'-0" @ FULL SIZE

0' 2" 4" 8"

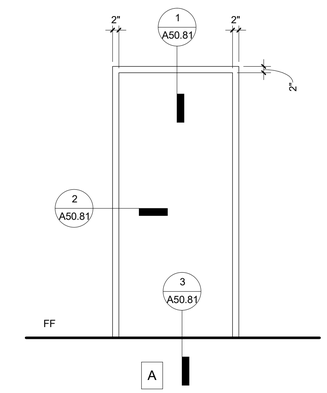

A

DOOR FRAME TYPE

1/2" = 1'-0" @ FULL SIZE

0' 6" 1' 2'

WINDOW SCHEDULE

Mark	Type	Description	Frame Material	Glazing Material	Width	Height	Sill Height	Head Height	Comments
101	A	FIXED	AL, MFR ANOD	IT	6' - 0"	4' - 0"	3' - 0"	7' - 0"	PROVIDE ROLLER SHADE ON ALL GLASS WINDOWS. 1
102	B	SLIDING	ALUM, MFR ANOD	IT	6' - 0"	4' - 0"	3' - 0"	7' - 0"	

ALL INSULATED GLASS UNITS MUST MEET THE FOLLOWING RATINGS:
U-FACTOR= 0.36 MAX.
SHGC= 0.38 MAX.
VT= 0.6

FENESTRATION PRODUCTS SHALL BE LABELED WITH NFRC U-FACTORS, SHGC, VT AND LEAKAGE RATING, OR IF PRODUCTS DO NOT HAVE NFRC RATING, INDICATE APPLICABLE WSEC CHAPTER 3 DEFAULT VALUES

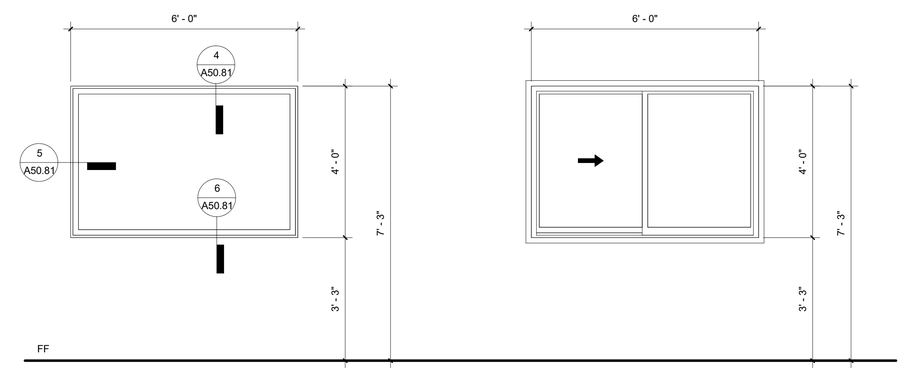

A ALUMINUM FIXED WINDOW

B ALUMINUM SLIDING WINDOW

WINDOW TYPES

1/2" = 1'-0" @ FULL SIZE

0' 6" 1' 2'

ISSUE FOR BID

	REVISIONS	DATE	BY
1	ADDENDUM No. 3	12/7/25	

DESIGNED Designer
DRAWN Author
CHECKED Checker
APPROVED Approver

ONE INCH AT FULL SCALE. IF NOT, SCALE ACCORDINGLY
FILE NAME
JOB No. 21090
DATE DECEMBER 2025

6250 REGISTERED ARCHITECT
Alex E. Rolluda
STATE OF WASHINGTON

KITSAP COUNTY
DEPT. OF PUBLIC WORKS
614 DIVISION STREET MS-26
PORT ORCHARD, WA 98366
TEL:(360) 337-5777 FAX:(360) 337-4867

Parametrix
ENGINEERING . PLANNING . ENVIRONMENTAL SCIENCES
719 SECOND AVENUE SE, SUITE 100 | SEATTLE, WA 98104
P 206.394.3700
WWW.PARAMETRIX.COM

PROJECT NAME
SILVERDALE RECYCLING AND GARBAGE FACILITY REDEVELOPMENT
KITSAP COUNTY, WASHINGTON

OPERATOR WARMING STATION WINDOW & DOOR TYPES AND SCHEDULES

DRAWING NO. OF
A50.71

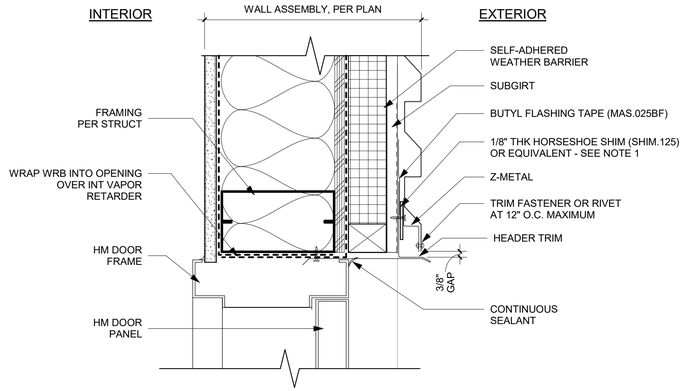

1 HM DOOR HEAD

3" = 1'-0" @ FULL SIZE

0' 1" 2" 4"

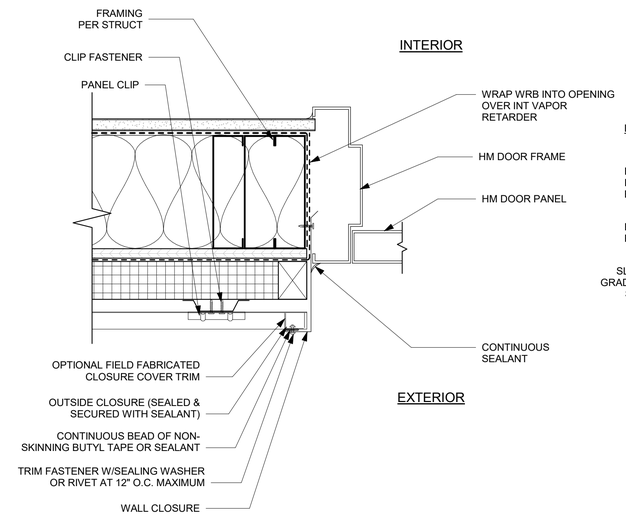

2 HM DOOR JAMB

3" = 1'-0" @ FULL SIZE

0' 1" 2" 4"

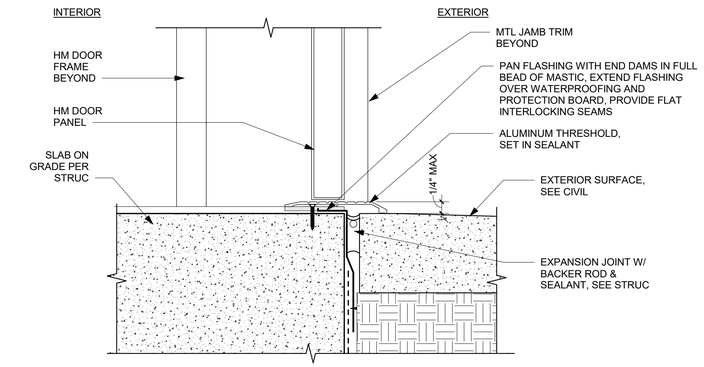

3 HM DOOR THRESHOLD

3" = 1'-0" @ FULL SIZE

0' 1" 2" 4"

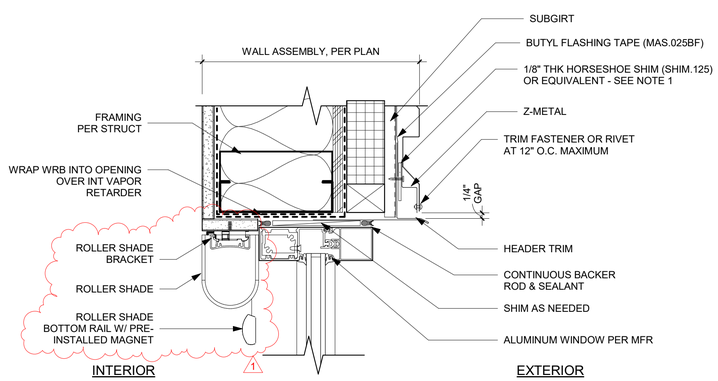

4 ALUMINUM WINDOW HEAD

3" = 1'-0" @ FULL SIZE

0' 1" 2" 4"

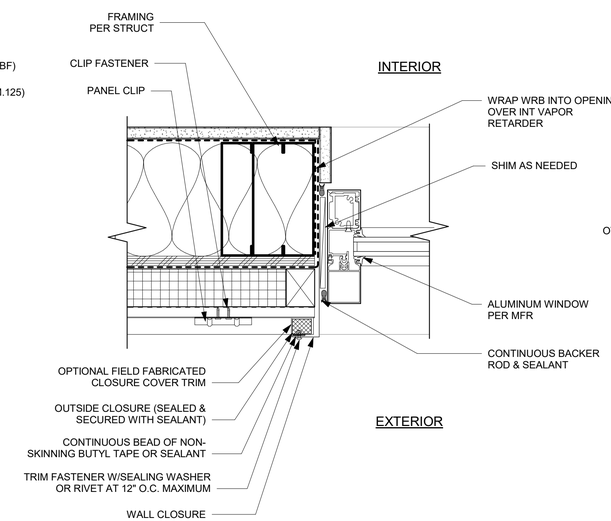

5 ALUMINUM WINDOW JAMB

3" = 1'-0" @ FULL SIZE

0' 1" 2" 4"

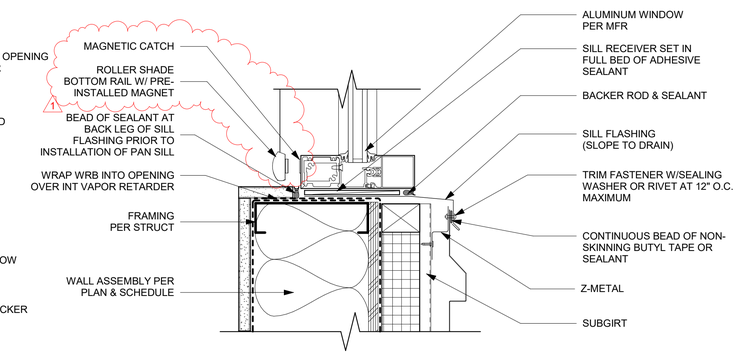

6 ALUMINUM WINDOW SILL AT METAL PANEL

3" = 1'-0" @ FULL SIZE

0' 1" 2" 4"

ISSUE FOR BID

	REVISIONS	DATE	BY
1	ADDENDUM No. 3	12/7/25	

DESIGNED Designer
DRAWN LCG
CHECKED Checker
APPROVED Approver

ONE INCH AT FULL SCALE. IF NOT, SCALE ACCORDINGLY

FILE NAME

JOB No. 21090

DATE DECEMBER 2025

6250 REGISTERED ARCHITECT Alex E. Rolluda STATE OF WASHINGTON

KITSAP COUNTY DEPT. OF PUBLIC WORKS
614 DIVISION STREET MS-26
PORT ORCHARD, WA 98366
TEL:(360) 337-5777 FAX:(360) 337-4867

Parametrix
ENGINEERING . PLANNING . ENVIRONMENTAL SCIENCES
719 SECOND AVENUE SE, SUITE 100 | SEATTLE, WA 98104
P 206.394.3700
WWW.PARAMETRIX.COM

PROJECT NAME
SILVERDALE RECYCLING AND GARBAGE FACILITY REDEVELOPMENT
KITSAP COUNTY, WASHINGTON

OPERATOR WARMING STATION BUILDING DETAILS

DRAWING NO. OF

A50.81

NOTES:

1. EQUIPMENT IS LOCATED IN THE CONTROL ROOM.

v 5.0

PANELBOARD SCHEDULE

NAME: PBD-AB1

VOLTAGE RATING: **120/240 VOLTS, 1 PHASE, 3 WIRE**
BUS RATING: **225A** AMPS
MAIN BREAKER: **225A** AMPS
FEED: **BOTTOM**
MOUNTING: **SURFACE**
SPECIAL FEATURES: **42KAIC**

LOCATION: **ATTENDANT BLDG - SERVER ROOM**
FED FROM: **MDP**
NOTES: **NEMA 1**

LOAD TYPE	CIRCUIT DESCRIPTION	VA	CKT	BRKR	L1	L2	BRKR	CKT	VA	CIRCUIT DESCRIPTION	LOAD TYPE
R	RECEPT, SERVER ROOM	360	1	20 / 1	-A-		40 / 2	2		SPD, MOUNTED ADJACENT TO PBD-AB1	
R	RECEPT, SERVER ROOM	360	3	20 / 1		-B-		4			
R	RECEPT, SERVER ROOM	540	5	20 / 1	-A-		20 / 2	6		SPARE	
R	RECEPT, HALL	720	7	20 / 1		-B-		8			
R	RECEPT, CONTROL ROOM	360	9	20 / 1	-A-		40 / 2	10		SPARE	
R	RECEPT, CONTROL ROOM - WEST	360	11	20 / 1		-B-		12			
R	RECEPT, CONTROL ROOM - NORTH	360	13	20 / 1	-A-		20 / 2	14	1,340	EWH-1,EWH-1(2),ECH-3,ECH-3(2) RELAYBOX	H
R	RECEPT, CONTROL ROOM - NORTH	360	15	20 / 1		-B-		16	1,340	EWH-1,EWH-1(2),ECH-3,ECH-3(2) RELAYBOX	H
R	RECEPT, CONTROL ROOM - NORTH	360	17	20 / 1	-A-		15 / 1	18		SPARE	
R	RECEPT, CONTROL ROOM - NORTH	360	19	20 / 1		-B-	15 / 1	20		SPARE	
R	RECEPT, CONTROL ROOM - EAST	360	21	20 / 1	-A-		15 / 1	22	120	HEATER, STORAGE RM, ECH-1	H
R	RECEPT, KITCHEN DISH WASHER/UNDERSINK	1,248	23	20 / 1		-B-	15 / 1	24	210	HEATER, RESTROOM, ECH-2	H
R	RECEPT, KITCHEN COUNTERTOP	360	25	20 / 1	-A-		15 / 1	26	36	EX-FAN, RESTROOM EF-1	H
R	RECEPT, KITCHEN COUNTERTOP MICROWAVE	1,200	27	20 / 1		-B-	20 / 1	28	1,176	SUPPLY FAN (SF-1) & DAMPER	H
R	RECEPT, KITCHEN REFRIGERATOR	1,800	29	20 / 1	-A-		15 / 2	30		SPARE	
R	RECEPT, OUTDOORS - NORTH AND EAST	360	31	20 / 1		-B-		32			
R	RECEPT, OUTDOORS - SOUTH AND WEST	360	33	20 / 1	-A-		30 / 2	34	2,250	HEATER, WATER, ATTIC (WH-1)	H
R	RECEPT, MEZZANINE	180	35	20 / 1		-B-		36	2,250		H
L	LTG, STORAGE RM, HALL, WORK RM.	343	37	20 / 1	-A-		40 / 2	38	2,880	DUCTLESS HEAT PUMP (HPCU-1/HPIU-1) POWER INDOOR UNIT THRU OUTDOOR UNIT.	H
L	LTG, SERVER RM & RESTROOM & MEZZANINE	106	39	20 / 1		-B-		40	2,880		H
X	ATTENDANT CALL (MCS-JB1)	319	41	20 / 1	-A-		40 / 2	42	2,640	DUCTLESS AC UNIT (ACCU-1/ACIU-1) POWER INDOOR UNIT THRU OUTDOOR UNIT.	H
L	LTG, EXIT SIGN	180	43	20 / 1		-B-		44	2,640		H
R	~~RECEPT, HALL~~	~~180~~	~~45~~	~~20 / 1~~	~~-A-~~		35 / 2	46	3,750	DUCT HEATER (DH-1)	H
X	~~FIRE ALARM CONTROL PANEL~~ SPARE	~~360~~	~~47~~	~~20 / 1~~ 1		~~-B-~~		48	3,750		H
X	~~GAS DETECTOR / CONTROLLER~~	~~24~~	~~49~~	~~20 / 1~~	~~-A-~~		30 / 2	50		SPARE	
X	GAS MONITOR RELAY CONTROL PANEL	30	51	20 / 1		-B-		52			
	SPARE		53	20 / 1	-A-		20 / 2	54		SPARE	
	SPARE		55	20 / 1		-B-		56			
	LINE LOADS:	**18,742**	**VA(L1)**						**20,070**	**VA(L2)**	
	TOTAL LOAD:	**38.81**	**KVA**			**161.7**	**AMPS**				

PBD-AB1 LOAD CALCULATION:

		CONNECTED VA		METHOD	NEC DEMAND	CALC. VA	
TOTAL EXISTING (E) LOAD FROM 30 DAY METER RECORDING, PER NEC (2017) 220.87:	E	0		ALL @	125%	0	
TOTAL LIGHTING (L) LOAD:	L	629		ALL @	125%	786	
TOTAL RECEPTACLE (R) LOAD:	R	10188		FIRST 10KVA @	125%	10000	
				REMAINDER OVER 10KVA	50%	94	
TOTAL MOTOR (M) LOAD:	M	0		ALL @	100%	0	
	LM	0		125% OF LARGEST	125%	0	
TOTAL HVAC (H) LOAD:	H	27262		ALL @	125%	34078	
TOTAL MISCELLANEOUS (X) LOAD:	X	733		ALL @	125%	916	
TOTAL VA:		38812	VA			45874	VA
AVERAGE AMPS @		162	AMPS			191	AMPS
VOLTAGE PHASE TO PHASE=	240						

v 5.0

PANELBOARD SCHEDULE

NAME: PBD-LH1

VOLTAGE RATING: **120/240 VOLTS, 1 PHASE, 3 WIRE**
BUS RATING: **150** AMPS
MAIN BREAKER: **150** AMPS
FEED: **BOTTOM**
MOUNTING: **SURFACE**
SPECIAL FEATURES: **42KAIC**

LOCATION: **LHHW BLDG - STORAGE ROOM**
FED FROM: **MDP**
NOTES: **NEMA 1**

LOAD TYPE	CIRCUIT DESCRIPTION	VA	CKT	BRKR	L1	L2	BRKR	CKT	VA	CIRCUIT DESCRIPTION	LOAD TYPE
R	RECEPT, EXTERIOR	180	1	20 / 1	-A-		20 / 1	2	94	LTG, WARMING ROOM & STORAGE & OUTSIDE	L
R	RECEPT, STORAGE RM	360	3	20 / 1		-B-	20 / 1	4	148	LTG, GARAGE	L
R	RECEPT, COMM CABINET	360	5	20 / 1	-A-		35 / 2	6	3,000	HEATER, WATER (WH-2)	H
R	RECEPT, WARMING ROOM	360	7	20 / 1		-B-		8	3,000		H
R	RECEPT, WARMING ROOM	180	9	20 / 1	-A-		20 / 1	10	500	HEATER, WALL (EWH-2)	H
X	REMOTE ATTENDANT CALL STATION	480	11	20 / 1		-B-	20 / 1	12	420	HEATER, COVE (ECH-4)	H
R	RECEPT, GARAGE SOUTH	360	13	20 / 1	-A-		20 / 1	14	210	HEATER, COVE (ECH-1)	H
R	RECEPT, GARAGE CENTER	360	15	20 / 1		-B-	20 / 1	16		SPARE	
R	RECEPT, GARAGE NORTH	360	17	20 / 1	-A-		20 / 1	18		SPARE	
R	RECEPT,FREEZE PROT. SINK & P-TRAP	72	19	20 / 1		-B-	20 / 1	20		SPARE	
R	RECEPT,FREEZE PROT. EYE WASH	36	21	20 / 1	-A-		20 / 1	22		SPARE	
	SPARE		23	20 / 1		-B-	20 / 1	24		SPARE	
	LINE LOADS:	**5,280**	**VA(L1)**						**5,200**	**VA(L2)**	
	TOTAL LOAD:	**10.48**	**KVA**			**43.7**	**AMPS**				

PBD-LH1 LOAD CALCULATION:

		CONNECTED VA		METHOD	NEC DEMAND	CALC. VA	
TOTAL EXISTING (E) LOAD FROM 30 DAY METER RECORDING, PER NEC (2017) 220.87:	E	0		ALL @	125%	0	
TOTAL LIGHTING (L) LOAD:	L	242		ALL @	125%	303	
TOTAL RECEPTACLE (R) LOAD:	R	2628		FIRST 10KVA @	125%	3285	
				REMAINDER OVER 10KVA	50%	0	
TOTAL MOTOR (M) LOAD:	M	0		ALL @	100%	0	
	LM	0		125% OF LARGEST	125%	0	
TOTAL HVAC (H) LOAD:	H	7130		ALL @	125%	8913	
TOTAL MISCELLANEOUS (X) LOAD:	X	480		ALL @	125%	600	
TOTAL VA:		10480	VA			13100	VA
AVERAGE AMPS @		44	AMPS			55	AMPS
VOLTAGE PHASE TO PHASE=	240						

v 5.0

PANELBOARD SCHEDULE

NAME: PBD-WS1

VOLTAGE RATING: **120/240 VOLTS, 1 PHASE, 3 WIRE**
BUS RATING: **225A** AMPS
MAIN BREAKER: **150** AMPS
FEED: **BOTTOM**
MOUNTING: **SURFACE**
SPECIAL FEATURES: **42KAIC**

LOCATION: **WARMING STATION NORTH SIDE**
FED FROM: **MDP**
NOTES: **NEMA 4X (SS), REFUSE SHED LOADS BASED UPON 240V, 20A LOAD**

LOAD TYPE	CIRCUIT DESCRIPTION	VA	CKT	BRKR	L1	L2	BRKR	CKT	VA	CIRCUIT DESCRIPTION	LOAD TYPE
R	RECEPT, WARMING STATION EXTERIOR	180	1	20 / 1	-A-		30 / 2	2	729	REFUSE SHED A	X
R	RECEPT, WARMING STATION INTERIOR	540	3	20 / 1		-B-		4	729		X
R	RECEPT, WARMING STATION INTERIOR	540	5	20 / 1	-A-		30 / 2	6	645	REFUSE SHED B	X
R	REMOTE ATTENDANT CALL STATION	480	7	20 / 1		-B-		8	645		X
	SPARE		9	20 / 1	-A-		30 / 2	10	729	REFUSE SHED C	X
L	LTG, WARMING STATION EXTERIOR	24	11	20 / 1		-B-		12	729		X
L	LTG, WARMING STATION INTERIOR	43	13	20 / 1	-A-		30 / 2	14	896	REFUSE SHED D	X
H	HEATER, WARMING STA. ECH-1 AND ECH-4	630	15	20 / 1		-B-		16	896		X
H	HEATER, WARMING STA. EWH-2	500	17	20 / 1	-A-		20 / 2	18		SPARE	
R	IRRIGATION CONTROLLER	600	19	20 / 1		-B-		20			
	SPARE		21	20 / 1	-A-		20 / 2	22		SPARE	
	SPARE		23	20 / 1		-B-		24			
	SPARE		25	20 / 1	-A-		20 / 1	26		SPARE	
	SPARE		27	20 / 1		-B-	20 / 1	28		SPARE	
	SPARE		29	20 / 1	-A-		20 / 1	30		SPARE	
	SPARE		31	20 / 1		-B-	20 / 1	32		SPARE	
	LINE LOADS:	**4,263**	**VA(L1)**						**5,274**	**VA(L2)**	
	TOTAL LOAD:	**9.54**	**KVA**			**39.7**	**AMPS**				

PBD-WS1 LOAD CALCULATION:

		CONNECTED VA		METHOD	NEC DEMAND	CALC. VA	
TOTAL EXISTING (E) LOAD FROM 30 DAY METER RECORDING, PER NEC (2017) 220.87:	E	0		ALL @	125%	0	
TOTAL LIGHTING (L) LOAD:	L	67		ALL @	125%	84	
TOTAL RECEPTACLE (R) LOAD:	R	2340		FIRST 10KVA @	125%	2925	
				REMAINDER OVER 10KVA	50%	0	
TOTAL MOTOR (M) LOAD:	M	0		ALL @	100%	0	
	LM	0		125% OF LARGEST	125%	0	
TOTAL HVAC (H) LOAD:	H	1130		ALL @	125%	1413	
TOTAL MISCELLANEOUS (X) LOAD:	X	6000		ALL @	100%	6000	
TOTAL VA:		9537	VA			10421	VA
AVERAGE AMPS @		40	AMPS			43	AMPS
VOLTAGE PHASE TO PHASE=	240						

ISSUE FOR BID

	REVISIONS	DATE	BY
1	ADDENDUM No. 3	12/9/2025	RWR

DESIGNED R. ROHLER
DRAWN J. VONDERAHE
CHECKED C. WITTMAN
APPROVED K. HUFNAGEL

ONE INCH AT FULL SCALE. IF NOT, SCALE ACCORDINGLY
FILE NAME PMX_E_R20_NEW.rvt
JOB No. 553-1578-155
DATE MARCH 2025

ROBERT W. ROHLER, STATE OF WASHINGTON, 41496, REGISTERED PROFESSIONAL ENGINEER
8/28/2025

KITSAP COUNTY DEPT. OF PUBLIC WORKS
614 DIVISION STREET MS-26
PORT ORCHARD, WA 98366
TEL:(360) 337-5777 FAX:(360) 337-4867

Parametrix
719 SECOND AVENUE SE, SUITE 100 | SEATTLE, WA 98104
P 206.394.3700
WWW.PARAMETRIX.COM

PROJECT NAME
SILVERDALE RECYCLING AND GARBAGE FACILITY REDEVELOPMENT
KITSAP COUNTY, WASHINGTON

ELECTRICAL SCHEDULES

DRAWING NO.
210 OF 239
E10.07

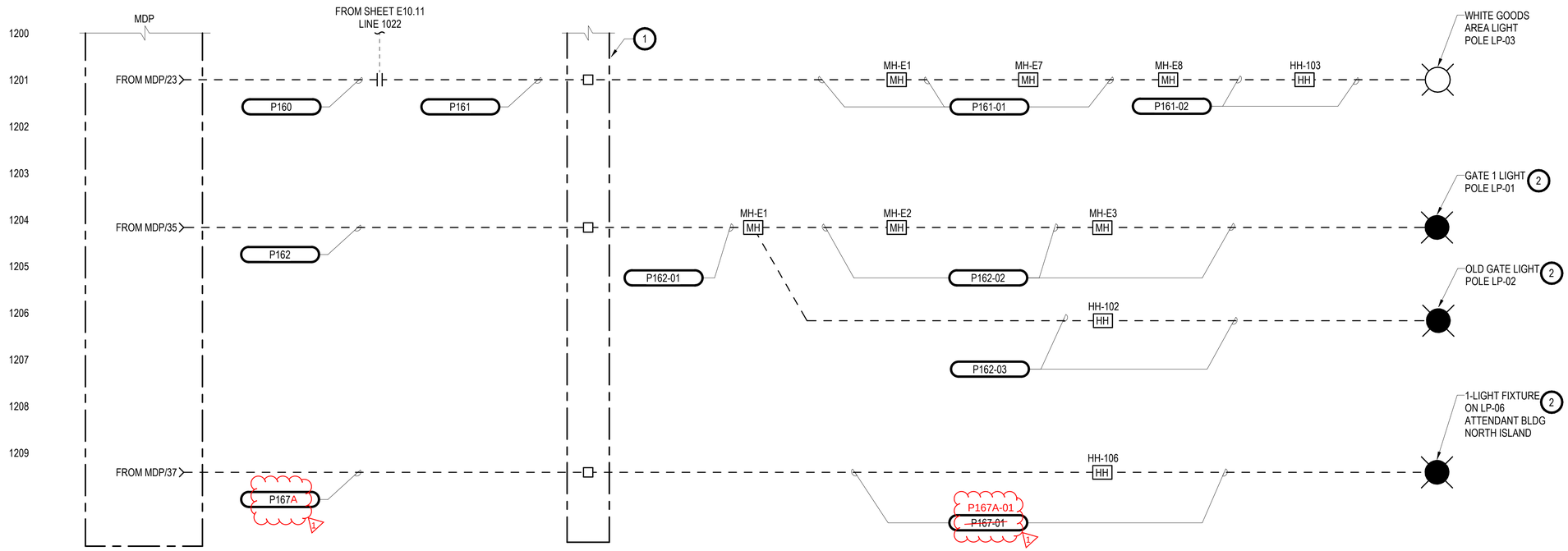

NOTES:

1. WIRE TROUGH - TERMINAL BOX FOR LARGER CONDUCTORS TO COMPENSATE FOR LONG CIRCUIT LENGTHS.
2. LIGHT FIXTURE IS ON ALL NIGHT, NO LIGHTING CONTACTOR CONTROL. LIGHT FIXTURE HAS ITS OWN PHOTOCELL CONTROL.

LIGHTING CONTROL PANEL LTG-CP1 ELEMENTARY

DIAGRAM 1

SCALE: NONE -

ISSUE FOR BID

	REVISIONS	DATE	BY
1	ADDENDUM No. 3	12/9/2025	RWR

DESIGNED R. ROHLER
DRAWN J. VONDERAHE
CHECKED C. WITTMAN
APPROVED K. HUFNAGEL

ONE INCH AT FULL SCALE. IF NOT, SCALE ACCORDINGLY
FILE NAME PMX_E_R20_NEW.rvt
JOB No. 553-1578-155
DATE MARCH 2025

ROBERT W. ROHLER — STATE OF WASHINGTON — 41496 — REGISTERED PROFESSIONAL ENGINEER
8/28/2025

KITSAP COUNTY
DEPT. OF PUBLIC WORKS
614 DIVISION STREET MS-26
PORT ORCHARD, WA 98366
TEL:(360) 337-5777 FAX:(360) 337-4867

Parametrix
719 SECOND AVENUE SE, SUITE 100 | SEATTLE, WA 98104
P 206.394.3700
WWW.PARAMETRIX.COM

PROJECT NAME
SILVERDALE RECYCLING AND GARBAGE FACILITY REDEVELOPMENT
KITSAP COUNTY, WASHINGTON

ELECTRICAL SITE LIGHTING CONTROL DIAGRAM LTG-CP1

DRAWING NO.
215 OF 239
E10.12

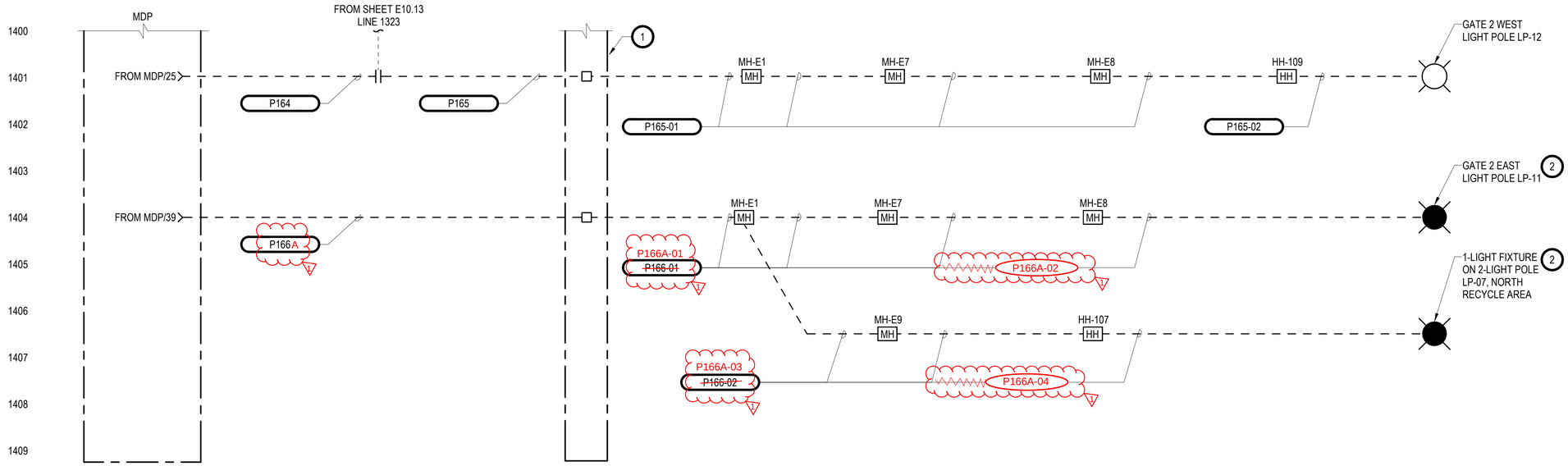

1. WIRE TROUGH - TERMINAL BOX FOR LARGER CONDUCTORS TO COMPENSATE FOR LONG CIRCUIT LENGTHS.
2. LIGHT FIXTURE IS ON ALL NIGHT, NO LIGHTING CONTACTOR CONTROL. LIGHT FIXTURE HAS ITS OWN PHOTOCELL CONTROL.

LIGHTING CONTROL PANEL LTG-CP2 ELEMENTARY DIAGRAM (1)

SCALE: NONE

ISSUE FOR BID

	REVISIONS	DATE	BY
1	ADDENDUM No. 3	12/9/2025	RWR

DESIGNED R. ROHLER
DRAWN J. VONDERAHE
CHECKED C. WITTMAN
APPROVED K. HUFNAGEL

ONE INCH AT FULL SCALE. IF NOT, SCALE ACCORDINGLY
FILE NAME PMX_E_R20_NEW.rvt
JOB No. 553-1578-155
DATE MARCH 2025

ROBERT W. ROHLER · STATE OF WASHINGTON · 41496 · REGISTERED PROFESSIONAL ENGINEER
8/28/2025

KITSAP COUNTY
DEPT. OF PUBLIC WORKS
614 DIVISION STREET MS-26
PORT ORCHARD, WA 98366
TEL:(360) 337-5777 FAX:(360) 337-4867

Parametrix
719 SECOND AVENUE SE, SUITE 100 | SEATTLE, WA 98104
P 206.394.3700
WWW.PARAMETRIX.COM

PROJECT NAME
SILVERDALE RECYCLING AND GARBAGE FACILITY REDEVELOPMENT
KITSAP COUNTY, WASHINGTON

ELECTRICAL SITE LIGHTING CONTROL DIAGRAM LTG-CP2

DRAWING NO. 217 OF 239
E10.14

CONDUIT AND CABLE SCHEDULE

v2.0

NUMBER	CONDUIT QTY & SIZE	CONDUIT TYPE	WIRE FILL	WIRE TYPE	FROM	TO	VIA	REMARKS
P100	(1) 4"	PVC / RGS	PULL STRING, PSE PROVIDED CABLE		PSE POLE DICKEY RD NW	PSE PAD MOUNTED TRANSFORMER		PROVIDE CONDUIT PER PSE ELECTRIC SERVICE HANDBOOK, PSE TO INSPECT CONDUIT PRIOR TO COVERING, PSE PROVIDED PRIMARY CABLE. PROVIDE THREADED PLUGS AT EACH END IN THE SPARE CONDUIT. PROVIDE BELLENDS FOR PSE'S USE ON MEDIUM VOLTAGE CABLE CONDUIT.
P100A	(1) 4" SPARE	PVC / RGS	PULL STRING		PSE POLE DICKEY RD NW	PSE PAD MOUNTED TRANSFORMER		PROVIDE CONDUIT PER PSE ELECTRIC SERVICE HANDBOOK, PSE TO INSPECT CONDUIT PRIOR TO COVERING, PROVIDE THREADED PLUGS (BOTH ENDS) IN SPARE CONDUIT.
C100	(1)3"	PVC / RGS	PULL STRING & INNERDUCT		LUMEN COMM PEDESTAL, DICKEY RD NW	4'x8' PLYWOOD BOARD SERVER ROOM		RGS WHERE CONDUIT IS EXPOSED, STUBUP CONDUIT 2' AFF AT PLYWOOD. ID CONDUIT "COMMUNICATIONS."
C100A	(1)3"	PVC / RGS	PULL STRING & INNERDUCT		FENCE LINE AT DICKEY RD NW	4'x8' PLYWOOD BOARD SERVER ROOM		SPARE CONDUIT, RGS WHERE CONDUIT IS EXPOSED, PROVIDE THREADED PLUGS (BOTH ENDS) IN SPARE CONDUIT. STUBUP CONDUIT 2' AFF AT PLYWOOOD. SPARE CONDUIT STOPS AT FENCE LINE. ID CONDUIT "COMMUNICATIONS."
C100B	(1)3"	PVC / RGS	PULL STRING & INNERDUCT		POLE AT DICKEY RD NW (EAST OF OLD GATE)	MH-C1		ALTERNATE COMMUNICATION CONDUIT, RGS WHERE CONDUIT IS EXPOSED. PROVIDE THREADED PLUGS AT BOTH END OF CONDUIT. MAINTAIN SEPARATION FROM POWER CONDUIT PER PSE ELECTRIC SERVICE HANDBOOK. ID CONDUIT "COMMUNICATIONS."
C100C	(1).3"	PVC / RGS	PULL STRING & INNERDUCT		MH-C1	4'x8' PLYWOOD BOARD SERVER ROOM		SPARE CONDUIT, RGS WHERE CONDUIT IS EXPOSED, PROVIDE THREADED PLUGS (BOTH ENDS) IN SPARE CONDUIT. STUBUP CONDUIT 2' AFF AT PLYWOOOD. SPARE CONDUIT STOPS AT FENCE LINE.
P101	(2) 3"	PVC / RGS	(2) #250 KCMIL, (1) #250 KCMIL NEU.	XHHW-2	PSE PAD MOUNTED TRANSFORMER	METER-CT-1 ENCLOSURE		RGS WHERE CONDUIT IS EXPOSED
P102	(2) 3"	PVC / RGS	(2) #250 KCMIL, (1) #250 KCMIL NEU, (1)#2/0 G	XHHW-2	METER-CT-1 ENCLOSURE	SE-DISC		RGS WHERE CONDUIT IS EXPOSED
P102A	(1) 2"	RGS	PULL STRING		METER-CT-1 ENCLOSURE	METER-1 METERBASE/SOCKET		PSE TO PROVIDE CT WIRING TO METER BASE / SOCKET
P102B	(1) 1.5"	PVC	(1) #2/0 GROUND ELECTRODE CONDUCTOR	BARE CU	SE-DISC	GROUND ELECTRODE SYSTEM		MAIN BONDING JUMP LOCATED IN SERVICE ENTRANCE DISONNECT (SE-DISC).
P103	(2) 3"	PVC / RGS	(2) #250 KCMIL, (1) #250 KCMIL NEU, (1)#2/0 G	XHHW-2	SE-DISC	ATS-1		RGS WHERE CONDUIT IS EXPOSED
C103	(1) 1"	PVC / RGS	(16) #14, (1) #14 G	XHHW-2	GEN-1	ATS-1		FOR ATS CONTROLS TO GENERATOR. COIL AND STOW SPARE WIRING.
C103A	(1) 1"	PVC / RGS	PULL STRING		GEN-1	SRV-1, SEE DRAWING FOR LOCATION		PROVIDE THREADED PLUGS (BOTH ENDS) IN SPARE CONDUIT.
P104	(2) 3"	PVC / RGS	(2) #250 KCMIL, (1) #250 KCMIL NEU, (1)#2/0 G	XHHW-2	GEN-1	ATS-1		RGS WHERE CONDUIT IS EXPOSED
C104	(1)1"	PVC / RGS	PULL STRING		ATS-1	SRV-1, SEE DRAWING FOR LOCATION		PROVIDE THREADED PLUGS (BOTH ENDS) IN SPARE CONDUIT.
P105	(2) 3"	PVC / RGS	(2) #250 KCMIL, (1) #250 KCMIL NEU, (1)#2/0 G	XHHW-2	ATS-1	MDP		RGS WHERE CONDUIT IS EXPOSED
C105	(1)1"	PVC/RGS	(12)#14, (1)#14G	XHHW-2	LTG-CP1	LTG-HS (ATTENDANT BLDG)	LTG-CP2	CONTROL WIRING FOR LTG-HS LOCATED IN ATTENDANT BUILDING TO LIGHTING CONTROL PANELS. COIL AND STOW SPARE WIRING.
P140	(1)3"	RGS	(1)#12, (1)#12NEU, (1)#12G	XHHW-2	MDP	LTG-CP2		CONDUIT MAYBE SHARED WITH MULTIPLE BRANCH CIRCUITS IF CONDUIT LENGTH IS COMPLIANT WITH NEC 310.15(C)(1)(b), REFUSE SHED EXTERIOR LIGHTING, RGS WHERE CONDUIT IS EXPOSED.
P141	(1)3"	RGS	(1)#12, (1)#12NEU, (1)#12G	XHHW-2	LTG-CP2	WIRE TROUGH		CONDUIT MAYBE SHARED WITH MULTIPLE BRANCH CIRCUITS IF CONDUIT LENGTH IS COMPLIANT WITH NEC 310.15(C)(1)(b), REFUSE SHED EXTERIOR LIGHTING, RGS WHERE CONDUIT IS EXPOSED.
C101A	(1)3"	PVC	PULL STRING		FENCE LINE	ATTENDANT BLDG SERVER ROOM		STUB UP CONDUIT INTO ATTENDANT SERVER ROOM. SEE DWG E30.01. PROVIDE THREADED PLUGS BOTH ENDS.

CONDUIT AND CABLE SCHEDULE

v2.0

NUMBER	CONDUIT QTY & SIZE	CONDUIT TYPE	WIRE FILL	WIRE TYPE	FROM	TO	VIA	REMARKS
P141-01	(1)2"	PVC/RGS	(1)#3, (1)#3NEU, (1)#3G	XHHW-2	WIRE TROUGH	MH-E5	MH-E1	LARGER CONDUCTOR DUE TO LONG CIRCUIT LENGTH VOLTAGE DROP, SITE LIGHTING FOR REFUSE SHEDS
P141-02	(1)2"	PVC/RGS	(1)#3, (1)#3NEU, (1)#3G	XHHW-2	MH-E5	JBOX-RSB		SPLICE INTO P141-01 IN MANHOLE, LARGER CONDUCTOR DUE TO LONG CIRCUIT LENGTH VOLTAGE DROP, RGS WHERE CONDUIT IS EXPOSED, SITE LIGHTING FOR REFUSE SHED
P141-03	(1)1"	PVC/RGS	(1)#10, (1)#10NEU, (1)#10G	XHHW-2	JBOX-RSB	EXTERIOR LIGHTING REFUSE SHED B		
P141-04	(1)2"	PVC/RGS	(1)#3, (1)#3NEU, (1)#3G	XHHW-2	MH-E5	JBOX-RSD		SPLICE INTO P141-01 IN MANHOLE, LARGER CONDUCTOR DUE TO LONG CIRCUIT LENGTH VOLTAGE DROP, RGS WHERE CONDUIT IS EXPOSED, SITE LIGHTING FOR REFUSE SHED
P141-05	(1)1"	PVC/RGS	(1)#10, (1)#10NEU, (1)#10G	XHHW-2	JBOX-RSD	EXTERIOR LIGHTING REFUSE SHED D		
P150	(1)3"	RGS	(1)#12, (1)#12NEU, (1)#12G	XHHW-2	MDP	LTG-CP1		CONDUIT MAYBE SHARED WITH MULTIPLE BRANCH CIRCUITS IF CONDUIT LENGTH IS COMPLIANT WITH NEC 310.15(C)(1)(b), SITE LTG LP-13, LP-14, AND LP-15
P151	(1)3"	RGS	(1)#12, (1)#12NEU, (1)#12G	XHHW-2	LTG-CP1	WIRE TROUGH		CONDUIT MAYBE SHARED WITH MULTIPLE BRANCH CIRCUITS IF CONDUIT LENGTH IS COMPLIANT WITH NEC 310.15(C)(1)(b), SITE LTG LP-13, LP-14, AND LP-15
P151-01	(1)3"	PVC/RGS	(1)#4, (1)#4NEU, (1)#4G	XHHW-2	WIRE TROUGH	MH-E5	MH-E1,	LARGER CONDUCTOR DUE TO LONG CIRCUIT LENGTH VOLTAGE DROP, SITE LIGHTING, RGS WHERE CONDUIT IS EXPOSED, SITE LTG LP-13, LP-14, AND LP-15
P151-02	(1)1"	PVC	(1)#10, (1)#10NEU, (1)#10G	XHHW-2	MH-E5	LP-13	HH-113	SPLICE IN MH-E5 TO P151-01, LARGER CONDUCTOR DUE TO LONG CIRCUIT LENGTH VOLTAGE DROP, SITE LIGHTING, SITE LTG
P151-03	(1)1"	PVC	(1)#10, (1)#10NEU, (1)#10G	XHHW-2	MH-E5	LP-14	HH-114	SPLICE IN MH-E5 TO P151-01, LARGER CONDUCTOR DUE TO LONG CIRCUIT LENGTH VOLTAGE DROP, SITE LIGHTING, SITE LTG
P151-04	(1)1"	PVC/RGS	(1)#10, (1)#10NEU, (1)#10G	XHHW-2	MH-E5	LP-15	HH-115	SPLICE IN MH-E5 TO P151-01, LARGER CONDUCTOR DUE TO LONG CIRCUIT LENGTH VOLTAGE DROP, SITE LIGHTING, SITE LTG, RGS WHERE CONDUIT IS EXPOSED.
C151-01	(1)3"	PVC	PULL STRING		COMM-WS1	MH-C5		PROVIDE THREADED PLUGS (BOTH ENDS) IN SPARE CONDUIT.
C151-02	(1)1"	PVC	PULL STRING		MH-C5	HH-115		PROVIDE THREADED PLUGS (BOTH ENDS) IN SPARE CONDUIT.
C151-03	(1)1"	PVC/RGS	PULL STRING		HH-115	LP-15		PROVIDE THREADED PLUGS (BOTH ENDS) IN SPARE CONDUIT, RGS WHERE CONDUIT IS EXPOSED.
C151-04	(1)1"	PVC	PULL STRING		MH-C5	HH-114		PROVIDE THREADED PLUGS (BOTH ENDS) IN SPARE CONDUIT.
C151-05	(1)1"	PVC/RGS	PULL STRING		HH-114	LP=14		PROVIDE THREADED PLUGS (BOTH ENDS) IN SPARE CONDUIT, RGS WHERE CONDUIT IS EXPOSED.
C151-06	(1)1"	PVC	PULL STRING		MH-C5	HH-113		PROVIDE THREADED PLUGS (BOTH ENDS) IN SPARE CONDUIT.
C151-07	(1)1"	PVC/RGS	PULL STRING		HH-113	LP-13		PROVIDE THREADED PLUGS (BOTH ENDS) IN SPARE CONDUIT, RGS WHERE CONDUIT IS EXPOSED.
P152	(1)3"	PVC/RGS	(1)#12, (1)#12NEU, (1)#12G	XHHW-2	MDP	LTG-CP1		CONDUIT MAYBE SHARED WITH MULTIPLE BRANCH CIRCUITS IF CONDUIT LENGTH IS COMPLIANT WITH NEC 310.15(C)(1)(b), ATTENDANT BUILDING EXTERIOR LIGHTING, RGS WHERE CONDUIT IS EXPOSED.

ISSUE FOR BID

	REVISIONS	DATE	BY
1	ADDENDUM No. 3	12/9/2025	RWR

DESIGNED R. ROHLER
DRAWN J. VONDERAHE
CHECKED C. WITTMAN
APPROVED K. HUFNAGEL

ONE INCH AT FULL SCALE. IF NOT, SCALE ACCORDINGLY
FILE NAME PMX_E_R20_NEW.rvt
JOB No. 553-1578-155
DATE MARCH 2025

ROBERT W. ROHLER, STATE OF WASHINGTON, 41496, REGISTERED PROFESSIONAL ENGINEER
8/28/2025

KITSAP COUNTY DEPT. OF PUBLIC WORKS
614 DIVISION STREET MS-26
PORT ORCHARD, WA 98366
TEL:(360) 337-5777 FAX:(360) 337-4867

Parametrix
719 SECOND AVENUE SE, SUITE 100 | SEATTLE, WA 98104
P 206.394.3700
WWW.PARAMETRIX.COM

PROJECT NAME
SILVERDALE RECYCLING AND GARBAGE FACILITY REDEVELOPMENT
KITSAP COUNTY, WASHINGTON

ELECTRICAL CONDUIT AND CABLE SCHEDULE 1

DRAWING NO. 221 OF 239
E10.20

CONDUIT AND CABLE SCHEDULE

v2.0

NUMBER	CONDUIT QTY & SIZE	CONDUIT TYPE	WIRE FILL	WIRE TYPE	FROM	TO	VIA	REMARKS
C162	(1)3"	PVC/RGS	PULL STRING & INNERDUCT		SRV-1, SEE DRAWING FOR LOCATION	MH-C1		PROVIDE THREADED PLUGS (BOTH ENDS) IN SPARE CONDUIT, RGS WHERE CONDUIT IS EXPOSED.
C162-01	(1)2"	PVC	PULL STRING & INNERDUCT		MH-C1	MH-C3	MH-C2	PROVIDE THREADED PLUGS (BOTH ENDS) IN SPARE CONDUIT
C162-02	(1)1"	PVC/RGS	PULL STRING		MH-C2	LP-01		PROVIDE THREADED PLUGS (BOTH ENDS) IN SPARE CONDUIT, RGS WHERE CONDUIT IS EXPOSED.
C162-03	(1)1"	PVC	PULL STRING		MH-C3	HH-C3A		PROVIDE THREADED PLUGS (BOTH ENDS) IN SPARE CONDUIT
C162-04	(1)1"	PVC	PULL STRING		MH-C1	HH-102		PROVIDE THREADED PLUGS (BOTH ENDS) IN SPARE CONDUIT
C162-05	(1)1"	PVC/RGS	PULL STRING		HH-102	LP-02		PROVIDE THREADED PLUGS (BOTH ENDS) IN SPARE CONDUIT, RGS WHERE CONDUIT IS EXPOSED.
P163	(1)1"	RGS	(1)#12, (1)#12NEU, (1)#12G	XHHW-2	MDP	WIRE TROUGH		
P163-01	(1)1"	PVC/RGS	(1)#10, (1)#10NEU, (1)#10G	XHHW-2	WIRE TROUGH	MH-E8	MH-E1, MH-E7	SPLICE TO P163 IN WIRE TROUGH, LARGER CONDUCTOR DUE TO LONG CIRCUIT LENGTH VOLTAGE DROP, SITE LIGHTING FOR GATE 2, RGS WHERE EXPOSED
P163-02	(1)1"	PVC/RGS	(1)#12, (1)#12NEU, (1)#12G	XHHW-2	MH-E8	LP-11		SPLICE TO P163-01 IN MH-E8, SITE LIGHTING FOR GATE 2, RGS WHERE EXPOSED
P163-03	(1)1"	PVC/RGS	(4)#12, (1)#12G	XHHW-2	LTG-CP2	WIRE TROUGH		LTG-HSG2 CONTROL WIRING BETWEEN MOMENTARY PUSH BUTTON AND LTG-CP2, COIL AND STOW SPARE WIRING.
P163-04	(1)1"	PVC/RGS	(4)#12, (1)#12G	XHHW-2	WIRE TROUGH	JBOX-G2	MH-E1, MH-E7, MH-E8	LTG-HSG2 CONTROL WIRING BETWEEN MOMENTARY PUSH BUTTON AND LTG-CP2
P163-05	(1)1"	PVC/RGS	(4)#12, (1)#12G	XHHW-2	JBOX-G2	LTG-HSG2		LTG-HSG2 CONTROL WIRING BETWEEN MOMENTARY PUSH BUTTON AND LTG-CP2, COIL AND STOW SPARE WIRING.
C163	(1)3"	PVC/RGS	PULL STRING & INNERDUCT		SRV-1, SEE DRAWING FOR LOCATION	MH-C1		PROVIDE THREADED PLUGS (BOTH ENDS) IN SPARE CONDUIT, RGS WHERE CONDUIT IS EXPOSED.
C163-01	(1)2"	PVC	PULL STRING & INNERDUCT		MH-C1	MH-C8	MH-C7	PROVIDE THREADED PLUGS (BOTH ENDS) IN SPARE CONDUIT
C163-02	(1)1"	PVC/RGS	PULL STRING		MH-C8	LP-11		PROVIDE THREADED PLUGS (BOTH ENDS) IN SPARE CONDUIT, RGS WHERE CONDUIT IS EXPOSED.
C163-03	(1)1"	PVC/RGS	PULL STRING		MH-C8	LP-03	HH-103	PROVIDE THREADED PLUGS (BOTH ENDS) IN SPARE CONDUIT, RGS WHERE CONDUIT IS EXPOSED.
C163-04	(1)1"	PVC	PULL STRING		MH-C8	HH-112		PROVIDE THREADED PLUGS (BOTH ENDS) IN SPARE CONDUIT
C163-05	(1)1"	PVC/RGS	PULL STRING		HH-112	LP-12		PROVIDE THREADED PLUGS (BOTH ENDS) IN SPARE CONDUIT, RGS WHERE CONDUIT IS EXPOSED.
P164	(1)3"	RGS	(1)#12, (1)#12NEU, (1)#12G	XHHW-2	MDP	LTG-CP2		CONDUIT IS SHARED WITH MULTIPLE BRANCH CIRCUITS IF CONDUIT LENGTH IS COMPLIANT WITH NEC 310.15(C)(1)(b)
P165	(1)3"	RGS	(1)#12, (1)#12NEU, (1)#12G	XHHW-2	LTG-CP2	WIRE TROUGH		CONDUIT IS SHARED WITH MULTIPLE BRANCH CIRCUITS IF CONDUIT LENGTH IS COMPLIANT WITH NEC 310.15(C)(1)(b)
P165-01	(1)1"	PVC/RGS	(1)#8, (1)#8NEU, (1)#8G	XHHW-2	WIRE TROUGH	HH-112	MH-E1, MH-E7, MH-E8	SPLICE WITH P165 IN WIRE TROUGH, LARGER CONDUCTOR DUE TO LONG CIRCUIT LENGTH VOLTAGE DROP, SITE LIGHTING FOR GATE 2, RGS WHERE EXPOSED
P165-02	(1)1"	PVC/RGS	(1)#12, (1)#12NEU, (1)#12G	XHHW-2	HH-112	LP-12		SPLICE WITH P165-01 IN HH 109, SITE LIGHTING FOR GATE 2, RGS WHERE EXPOSED
P166	(1)1"	PVC	(1)#12, (1)#12NEU, (1)#12G	XHHW-2	MDP	ATS-1		BRANCH CIRCUIT FOR ATS STRIP HEATER.
P167	(1)1"	PVC	(1)#12, (1)#12NEU, (1)#12G	XHHW-2	MDP	PSE AMR/AMI REPEATER ENCLOSURE RECEPT		120V RECEPTACLE.
P168	(1)1"	RGS	(1)#12, (1)#12NEU, (1)#12G	XHHW-2	MDP	LTG-CP2		
P169	(1)1"	PVC	(1)#12, (1)#12NEU, (1)#12G		LTG-CP2	WIRE TROUGH		
P169-01	(1)1"	PVC	(1)#6, (1)#6NEU, (1)#6G		WIRE TROUGH	MH-E1		LARGER CONDUCTOR DUE TO LONG CIRCUIT LENGTH VOLTAGE DROP, RGS WHERE CONDUIT IS EXPOSED.
P167A	(1)1"	PVC	(1)#12, (1)#12NEU, (1)#12G	XHHW-2	MDP	WIRE TROUGH		
P167A-01	(1)1"	PVC	(1)#10, (1)#10NEU, (1)#10G	XHHW-2	WIRE TROUGH	LP-06	HH-106	SPLICE WITH P167A IN WIRE TROUGH LARGER CONDUCTOR DUE TO LONG CIRCUIT LENGTH VOLTAGE DROP. 1

CONDUIT AND CABLE SCHEDULE

v2.0

NUMBER	CONDUIT QTY & SIZE	CONDUIT TYPE	WIRE FILL	WIRE TYPE	FROM	TO	VIA	REMARKS
P169-02	(1)1"	PVC	(1)#6, (1)#6NEU, (1)#6G		MH-E1	HH-110	MH-E7	LARGER CONDUCTOR DUE TO LONG CIRCUIT LENGTH VOLTAGE DROP
P169-03	(1)1"	PVC	(1)#12, (1)#12NEU, (1)#12G		HH-110	LP-10		
P169-04	(1)1"	PVC	(1)#6, (1)#6NEU, (1)#6G		HH-110	HH-109		LARGER CONDUCTOR DUE TO LONG CIRCUIT LENGTH VOLTAGE DROP
P169-05	(1)1"	PVC	(1)#12, (1)#12NEU, (1)#12G		HH-109	LP-09		
P201	(1) 3"	PVC / RGS	(2) #4/0, (1) #4/0 NEU, (1) #4 G	XHHW-2	MDP	PBD-AB1		RGS WHERE EXPOSED
P202	(1) 2"	PVC / RGS	PULL STRING		MDP	STUB-UP BELOW PBD-AB1		PROVIDE THREADED PLUGS (BOTH ENDS) IN SPARE CONDUIT, RGS WHERE CONDUIT IS EXPOSED.
P203	(1) 2"	PVC / RGS	PULL STRING		JBOX-AB1	STUB UP BELOW PBD-AB1		PROVIDE THREADED PLUGS (BOTH ENDS) IN SPARE CONDUIT, RGS WHERE CONDUIT IS EXPOSED.
C201	(1) 1"	PVC / RGS	(16)#14, (1)#14 G	XHHW-2	HS-LCP (ATTENDANT BUILDING)	LTG-CP2 (EQUIPMENT RACK)	WIRE TROUGH, LTG-CP1 (EQUIPMENT RACK)	SEE LIGHTING CONTROL PANEL WIRING DIAGRAM, COIL AND STOW SPARE WIRING, CONDUIT AND WIRING PASS THRU WIRING TROUGH, RGS WHERE CONDUIT IS EXPOSED.
C202	(1) 1"	PVC / RGS	PULL STRING		STUB-UP CONDUIT 4'x8' PLYWOOD BOARD SERVER ROOM	STUB-UP BELOW METER-1 (EQUIPMENT RACK)		PROVIDE THREADED PLUGS (BOTH ENDS) IN SPARE CONDUIT, RGS WHERE CONDUIT IS EXPOSED.
C203	(1) 1"	PVC / RGS	PULL STRING		STUB-UP CONDUIT 4'x8' PLYWOOD BOARD SERVER ROOM	STUB-UP ADJACENT TO ATS-1 (EQUIPMENT RACK)		PROVIDE THREADED PLUGS (BOTH ENDS) IN SPARE CONDUIT, RGS WHERE CONDUIT IS EXPOSED.
C204(A)	(1) 1"	PVC / RGS	PULL STRING		STUB-UP SERVER ROOM, SEE DRAWING FOR LOCATION	WEST OUTBOUND SCALE AREA UNDERGROUND, SEE DRAWING FOR LOCATION		PROVIDE THREADED PLUGS (BOTH ENDS) IN SPARE CONDUIT, RGS WHERE CONDUIT IS EXPOSED.
C204(B)	(1)1"	PVC / RGS	PULL STRING		STUB-UP SERVER ROOM, SEE DRAWING FOR LOCATION	WEST OUTBOUND SCALE AREA UNDERGROUND, SEE DRAWING FOR LOCATION		PROVIDE THREADED PLUGS (BOTH ENDS) IN SPARE CONDUIT, RGS WHERE CONDUIT IS EXPOSED.
C205	(1) 3"	PVC / RGS	PULL STRING		STUB-UP SERVER ROOM, SEE DRAWING FOR LOCATION	WEST OUTBOUND SCALE AREA UNDERGROUND, SEE DRAWING FOR LOCATION		PROVIDE THREADED PLUGS (BOTH ENDS) IN SPARE CONDUIT, RGS WHERE CONDUIT IS EXPOSED.
C206(A)	(1) 1"	PVC / RGS	PULL STRING		STUB-UP SERVER ROOM, SEE DRAWING FOR LOCATION	EAST INBOUND SCALE AREA UNDERGROUND, SEE DRAWING FOR LOCATION		PROVIDE THREADED PLUGS (BOTH ENDS) IN SPARE CONDUIT, RGS WHERE CONDUIT IS EXPOSED.
C206(B)	(1) 1"		PULL STRING		STUB-UP SERVER ROOM, SEE DRAWING FOR LOCATION	EAST INBOUND SCALE AREA UNDERGROUND, SEE DRAWING FOR LOCATION		PROVIDE THREADED PLUGS (BOTH ENDS) IN SPARE CONDUIT, RGS WHERE CONDUIT IS EXPOSED.
C207	(1) 3"	PVC / RGS	PULL STRING		STUB-UP SERVER ROOM, SEE DRAWING FOR LOCATION	EAST INBOUND SCALE AREA UNDERGROUND, SEE DRAWING FOR LOCATION		PROVIDE THREADED PLUGS (BOTH ENDS) IN SPARE CONDUIT, RGS WHERE CONDUIT IS EXPOSED.
C208	(1) 2"	PVC / RGS	PULL STRING & INNERDUCT		STUB-UP SERVER ROOM, SEE DRAWING FOR LOCATION	JBOX-AB1		PROVIDE THREADED PLUGS (BOTH ENDS) IN SPARE CONDUIT, RGS WHERE CONDUIT IS EXPOSED.
P211	(1)1"C	PVC/RGS	(2)#8,(1)#8N, (1)#10G	XHHW-2	PBD-AB1	HPIU-1 (OUTDOOR)	OUTDOOR DISCONNECT SWITCH	POWER INDOOR UNIT THRU OUTDOOR UNIT.
P213	(1)1"C	PVC/RGS	(2)#8,(1)#8N, (1)#10G	XHHW-2	PBD-AB1	ACCU-1 (OUTDOOR)	OUTDOOR DISCONNECT SWITCH	POWER INDOOR UNIT THRU OUTDOOR UNIT.
P214	(1)1"C	EMT	(2)#10, (1)#10G	XHHW-2	PBD-AB1	WH-1	INDOOR DISCONNECT SWITCH	
P216	(1)1"C	EMT	(2)#8, (1)#10G	XHHW-2	PBD-AB1	DH-1	INDOOR DISCONNECT SWITCH	
P301	(1) 2"	PVC / RGS	(2) #2/0, (1) #2/0 NEU, (1) #4 G	XHHW-2	MDP	PBD-LH1	JBOX-AB1	LARGER CONDUCTORS FOR LONG CIRCUIT LENGTH VOLTAGE DROP. USE JBOX-AB1 AND INSULATED CONNECTORS TO ACCOMMODATE DIFFERENT WIRE SIZES. RGS WHERE EXPOSED.
P302	(1) 2"	PVC / RGS	PULL STRING		MDP	STUB-UP BELOW PBD-LH1	JBOX-AB1	PROVIDE THREADED PLUGS (BOTH ENDS) FOR SPARE CONDUIT
P303	(1)1"	PVC / RGS	PULL STRING		PBD-LH1	LHHW BLDG, SEE DRAWING FOR STUB-UP LOCATION		PROVIDE THREADED PLUGS (BOTH ENDS) FOR SPARE CONDUIT
P304	(1)1"	PVC / RGS	PULL STRING		PBD-LH1	LHHW BLDG, SEE DRAWING FOR STUB-UP LOCATION		PROVIDE THREADED PLUGS (BOTH ENDS) FOR SPARE CONDUIT

ISSUE FOR BID

	REVISIONS	DATE	BY
1	ADDENDUM No. 3	12/9/2025	RWR

DESIGNED R. ROHLER
DRAWN J. VONDERAHE
CHECKED C. WITTMAN
APPROVED K. HUFNAGEL

ONE INCH AT FULL SCALE. IF NOT, SCALE ACCORDINGLY
FILE NAME PMX_E_R20_NEW.rvt
JOB No. 553-1578-155
DATE MARCH 2025

ROBERT W. ROHLER, STATE OF WASHINGTON, 41496, REGISTERED PROFESSIONAL ENGINEER
8/28/2025

KITSAP COUNTY
DEPT. OF PUBLIC WORKS
614 DIVISION STREET MS-26
PORT ORCHARD, WA 98366
TEL:(360) 337-5777 FAX:(360) 337-4867

Parametrix
719 SECOND AVENUE SE, SUITE 100 | SEATTLE, WA 98104
P 206.394.3700
WWW.PARAMETRIX.COM

PROJECT NAME
SILVERDALE RECYCLING AND GARBAGE FACILITY REDEVELOPMENT
KITSAP COUNTY, WASHINGTON

ELECTRICAL CONDUIT AND CABLE SCHEDULE 3

DRAWING NO.
223 OF 239
E10.22

CONDUIT AND CABLE SCHEDULE

v2.0

NUMBER	CONDUIT QTY & SIZE	CONDUIT TYPE	WIRE FILL	WIRE TYPE	FROM	TO	VIA	REMARKS
P305	(1)1"	PVC/RGS	(2)#8, (1)#10G	XHHW-2	PBD-LH1	WH-2		
C301	(1) 2"	PVC / RGS	(2)CAT6	CAT6	MCS-JB1 ETHERNET EXTENDED JBOX	(ACS-7) REMOTE ATTENDANT CALL STATION LHHW BLDG	MH-C1, MH-C9	RGS WHERE EXPOSED, PROVIDE INNERDUCT
C302	(1) 2"	PVC / RGS	PULL STRING & INNERDUCT		SERVER ROOM, ATTENDANT BLDG, SEE DRAWING FOR LOCATION	STORAGE ROOM, LHHW BLDG SEE DRAWING FOR STUB-UP LOCATION	MH-C1, MH-C9	PROVIDE THREADED PLUGS (BOTH ENDS) IN SPARE CONDUIT, RGS WHERE EXPOSED
C303	(1)3"	PVC / RGS	PULL STRING & INNERDUCT		MCS-JB1 ETHERNET EXTENDED JBOX	MH-C1		PROVIDE THREADED PLUGS (BOTH ENDS) IN SPARE CONDUIT, RGS WHERE EXPOSED
P401	(1) 3"	RGS	(2) #4/0, (1) #4/0 NEU, (1) #4/0G	XHHW-2	MDP	JBOX-AB1		LARGER CONDUCTORS FOR LONG CIRCUIT LENGTH VOLTAGE DROP. RGS WHERE EXPOSED
P402	(1) 3"	PVC/RGS	(2) #500 KCMIL, (1) #500 KCMIL NEU, (1) #500G	XHHW-2	JBOX-AB1	JBOX-WS1	MH-E1, MH-E5	SPLICE TO P401 AT JBOX-AB1 LARGER CONDUCTORS FOR LONG CIRCUIT LENGTH VOLTAGE DROP. RGS WHERE EXPOSED
P403	(1) 3"	PVC/RGS	(2) #4/0, (1) #4/0 NEU, (1) #4/0G	XHHW-2	JBOX-WS1	PBD-WS1		LARGER CONDUCTORS FOR LONG CIRCUIT LENGTH VOLTAGE DROP. RGS WHERE EXPOSED
P404	(1) 3"	PVC/RGS	PULL STRING		JBOX-AB1	JBOX-WS1		PROVIDE THREADED PLUGS (BOTH ENDS OF CONDUIT) IN SPARE CONDUIT.
P405	(1)1"	PVC/RGS	PULL STRING		PBD-WS1	OPERATOR WARMING STATION, SEE DRAWING FOR LOCATOIN	JBOX-WS1	PROVIDE THREADED PLUGS (BOTH ENDS OF CONDUIT) IN SPARE CONDUIT.
P406	(1)1"	PVC/RGS	PULL STRING		PBD-WS1	OPERATOR WARMING STATION, SEE DRAWING FOR LOCATOIN	JBOX-WS1	PROVIDE THREADED PLUGS (BOTH ENDS OF CONDUIT) IN SPARE CONDUIT.
C401	(1) 2"	PVC / RGS	(2)CAT6	CAT6	MCS-JB1 ETHERNET EXTENDED JBOX	(ACS-2) REMOTE ATTENDANT CALL STATION OPERATOR WARMING STATION	MH-C1, MH-C5	RGS WHERE EXPOSED, PROVIDE INNERDUCT
C402	(2) 3"	PVC / RGS	PULL STRING & INNERDUCT		SERVER ROOM, ATTENDANT BLDG, SEE DRAWING FOR LOCATION	COMM-WS1, OPERATOR WARMING STATION	MH-C1, MH-C5	PROVIDE THREADED PLUGS (BOTH ENDS) IN SPARE CONDUIT, RGS WHERE EXPOSED
C403	(1) 1"	PVC / RGS	PULL STRING		COMM-WS1, OPERATOR WARMING STATION	OPERATOR WARMING STATION, SEE DRAWING FOR LOCATOIN		PROVIDE THREADED PLUGS (BOTH ENDS) IN SPARE CONDUIT, RGS WHERE EXPOSED
C404	(1) 1"	PVC / RGS	PULL STRING		COMM-WS1, OPERATOR WARMING STATION	OPERATOR WARMING STATION, SEE DRAWING FOR LOCATOIN		PROVIDE THREADED PLUGS (BOTH ENDS) IN SPARE CONDUIT, RGS WHERE EXPOSED
C405	(1) 1"	PVC / RGS	PULL STRING		COMM-WS1, OPERATOR WARMING STATION	OPERATOR WARMING STATION, SEE DRAWING FOR LOCATOIN		PROVIDE THREADED PLUGS (BOTH ENDS) IN SPARE CONDUIT, RGS WHERE EXPOSED
P501	(1)1"	PVC/RGS	(2)#8, (1)#8 NEU, (1)#8 G	XHHW-2	PBD-WS1	PBD-RSA	JBOX-WS1, MH-E5	RGS WHERE EXPOSED
C501	(1)1"	PVC/RGS	PULL STRING		COMM-WS1	REFUSE SHED A	MH-C5	PROVIDE THREADED PLUGS (BOTH ENDS) IN SPARE CONDUIT, RGS WHERE EXPOSED
P502	(1)1"	PVC/RGS	PULL STRING		PBD-WS1	STUB UP BELOW PBD-RSA	JBOX-WS1, MH-E5	PROVIDE THREADED PLUGS (BOTH ENDS) IN SPARE CONDUIT, RGS WHERE EXPOSED
P511	(1)1"	RGS	(1)#12, (1)#12 NEU, (1)#12 G	XHHW-2	PBD-RSA	LTG, EXTERIOR, REAR OF BLDG		
P512	(1)1"	RGS	(1)#12, (1)#12 NEU, (1)#12 G	XHHW-2	PBD-RSA	LTG, INTERIOR	LIGHT SWITCH	
P513	(1)1"	RGS	(1)#12, (1)#12 NEU, (1)#12 G	XHHW-2	PBD-RSA	RECEPTS, INTERIOR		
P514	(1)1"	RGS	(1)#12, (1)#12 NEU, (1)#12 G	XHHW-2	PBD-RSA	RECEPT, EXTERIOR		
P601	(1)1"	PVC/RGS	(2)#8, (1)#8 NEU, (1)#8 G	XHHW-2	PBD-WS1	PBD-RSB	JBOX-WS1, MH-E5	RGS WHERE EXPOSED
C601	(1)1"	PVC/RGS	PULL STRING		COMM-WS1	REFUSE SHED B	MH-C5	PROVIDE THREADED PLUGS (BOTH ENDS) IN SPARE CONDUIT, RGS WHERE EXPOSED
P602	(1)1"	PVC/RGS	PULL STRING		PBD-WS1	STUB UP BELOW PBD-RSB	JBOX-WS1, MH-E5	PROVIDE THREADED PLUGS (BOTH ENDS) IN SPARE CONDUIT, RGS WHERE EXPOSED
P611	(1)1"	RGS	(1)#12, (1)#12 NEU, (1)#12 G	XHHW-2	PBD-RSB	LTG, INTERIOR	LIGHT SWITCH	
P612	(1)1"	RGS	(1)#12, (1)#12 NEU, (1)#12 G	XHHW-2	PBD-RSB	RECEPTS, INTERIOR		
P613	(1)1"	RGS	(1)#12, (1)#12 NEU, (1)#12 G	XHHW-2	PBD-RSB	RECEPT, EXTERIOR		
P701	(1)1"	PVC/RGS	(2)#8, (1)#8 NEU, (1)#8 G	XHHW-2	PBD-WS1	PBD-RSC	JBOX-WS1, MH-E5	RGS WHERE EXPOSED

CONDUIT AND CABLE SCHEDULE

v2.0

NUMBER	CONDUIT QTY & SIZE	CONDUIT TYPE	WIRE FILL	WIRE TYPE	FROM	TO	VIA	REMARKS
C701	(1)1"	PVC/RGS	PULL STRING		COMM-WS1	REFUSE SHED C	MH-C5	PROVIDE THREADED PLUGS (BOTH ENDS) IN SPARE CONDUIT, RGS WHERE EXPOSED
P702	(1)1"	PVC/RGS	PULL STRING		PBD-WS1	STUB UP BELOW PBD-RSC	JBOX-WS1, MH-E5	PROVIDE THREADED PLUGS (BOTH ENDS) IN SPARE CONDUIT, RGS WHERE EXPOSED
P711	(1)1"	RGS	(1)#12, (1)#12 NEU, (1)#12 G	XHHW-2	PBD-RSC	EXTERIOR LTG, REAR BLDG		
P712	(1)1"	RGS	(1)#12, (1)#12 NEU, (1)#12 G	XHHW-2	PBD-RSC	LTG, INTERIOR	LIGHT SWITCH	
P713	(1)1"	RGS	(1)#12, (1)#12 NEU, (1)#12 G	XHHW-2	PBD-RSC	RECEPTS, INTERIOR		
P714	(1)1"	RGS	(1)#12, (1)#12 NEU, (1)#12 G	XHHW-2	PBD-RSC	RECEPT, EXTERIOR		
P801	(1)1"	PVC/RGS	(2)#8, (1)#8 NEU, (1)#8 G	XHHW-2	PBD-WS1	PBD-RSD	JBOX-WS1, MH-E5	RGS WHERE EXPOSED
C801	(1)1"	PVC/RGS	PULL STRING		COMM-WS1	REFUSE SHED D	MH-C5	PROVIDE THREADED PLUGS (BOTH ENDS) IN SPARE CONDUIT, RGS WHERE EXPOSED
P802	(1)1"	PVC/RGS	PULL STRING		PBD-WS1	STUB UP BELOW PBD-RSD	JBOX-WS1, MH-E5	PROVIDE THREADED PLUGS (BOTH ENDS) IN SPARE CONDUIT, RGS WHERE EXPOSED
P803	(1)1"	PVC/RGS	(1)#10, (1)#10 NEU, (1)#10 G	XHHW-2	PBD-RSD	MAINTENANCE SHED DISCONNECT SWITCH		RGS WHERE EXPOSED, INTERIOR MAINTENANCE SHED CONDUIT WILL BE ROUTED AS 1" RGS. SEE DWG C40.03 FOR UNDERGROUND STORM DRAIN UTILITIY SAME AREA.
P812	(1)1"	RGS	(1)#12, (1)#12 NEU, (1)#12 G	XHHW-2	PBD-RSD	LTG, INTERIOR	LIGHT SWITCH	
P813	(1)1"	RGS	(1)#12, (1)#12 NEU, (1)#12 G	XHHW-2	PBD-RSD	RECEPTS, INTERIOR		
P814	(1)1"	RGS	(1)#12, (1)#12 NEU, (1)#12 G	XHHW-2	PBD-RSD	RECEPT, EXTERIOR		
P901	(1)1"	EMT	(1)#12, (1)#12 NEU, (1)#12 G	XHHW-2	PBD-AB1	GAS DETECTOR / CONTROLLER	TOGGLE SWITCH	PROVIDE TOGGLE DISCONNECT SWITCH ADJACENT TO GAS DETECTOR / CONTROLLER, SEE DWG M10.05.
P902	(1)1"	EMT	(1)#12, (1)#12 NEU, (1)#12 G	XHHW-2	PBD-AB1	RELAY CONTROL PANEL	TOGGLE SWITCH	PROVIDE TOGGLE DISCONNECT SWITCH ADJACENT TO RELAY CONTROL PANEL, SEE DWG M10.05.
P903	(1)1"	EMT	(4)#12, (4)#12 NEU, (4)#12 G	XHHW-2	RELAY CONTROL PANEL	GAS DETECTOR / CONTROLLER		COIL AND STOW SPARE WIRING, SEE DWG M10.05.
P904	(1)1"	EMT	(2)#12, (2)#12 NEU, (2)#12 G	XHHW-2	RELAY CONTROL PANEL	HIGH AND LOW ALERT RED WARNNG WALL LIGHTS	CONDUIT BODY, TYPE T. OR JUNCTION BOX.	TO PROVIDE POWER TO WARNING WALL MOUNTED LIGHTS.
P166A	(1)1"	PVC	(1)#12, (1)#12 NEU, (1)#12 G	XHHW-2	MDP	WIRE TROUGH		
P166A-01	(1)1"	PVC	(1)#8, (1)#8 NEU, (1)#8 G	XHHW-2	WIRE TROUGH	HH-E8		SPLICE WITH P166A IN WIRE TROUGH LARGER CONDUCTOR DUE TO LONG CIRCUIT LENGTH VOLTAGE DROP.
P166A-02	(1)1"	PVC	(1)#12, (1)#12 NEU, (1)#12 G	XHHW-2	HH-E8	LP-11		SPLICE WITH P166A-01. SEE DWG E14.01.
P166A-03	(1)1"	PVC	(1)#8, (1)#8 NEU, (1)#8 G	XHHW-2	HH-E1	HH-107		SPLICE WITH P166A. SEE DWG E1.
P166A-04	(1)1"	PVC	(1)#12, (1)#12 NEU, (1)#12 G	XHHW-2	HH-107	LP-07		SPLICE WITH P166A-03. SEE DWG E14.01.

1

ISSUE FOR BID

	REVISIONS	DATE	BY
1	ADDENDUM No. 3	12/9/2025	RWR

DESIGNED R. ROHLER
DRAWN J. VONDERAHE
CHECKED C. WITTMAN
APPROVED K. HUFNAGEL

ONE INCH AT FULL SCALE. IF NOT, SCALE ACCORDINGLY
FILE NAME PMX_E_R20_NEW.rvt
JOB No. 553-1578-155
DATE MARCH 2025

ROBERT W. ROHLER, STATE OF WASHINGTON, 41496, REGISTERED PROFESSIONAL ENGINEER
8/28/2025

KITSAP COUNTY
DEPT. OF PUBLIC WORKS
614 DIVISION STREET MS-26
PORT ORCHARD, WA 98366
TEL:(360) 337-5777 FAX:(360) 337-4867

Parametrix
719 SECOND AVENUE SE, SUITE 100 | SEATTLE, WA 98104
P 206.394.3700
WWW.PARAMETRIX.COM

PROJECT NAME
SILVERDALE RECYCLING AND GARBAGE FACILITY REDEVELOPMENT
KITSAP COUNTY, WASHINGTON

ELECTRICAL CONDUIT AND CABLE SCHEDULE 4

DRAWING NO.

E10.23

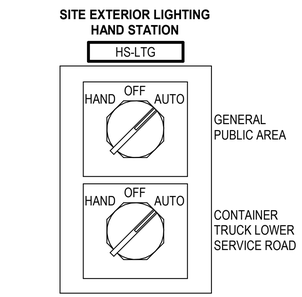

HS-LTG
DETAIL 2
SCALE: NONE

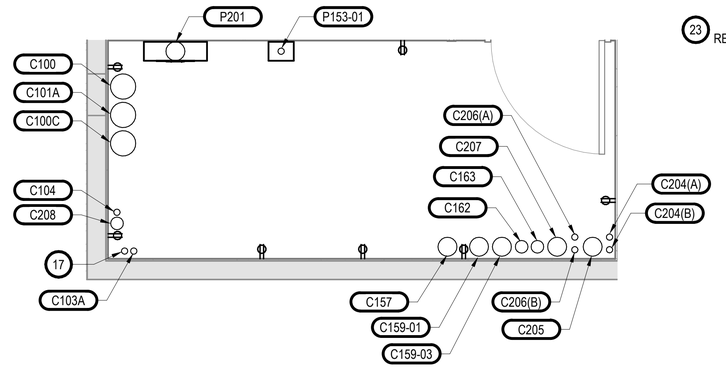

CONDUIT STUB UP SERVER ROOM
DETAIL 3
SCALE: NONE -

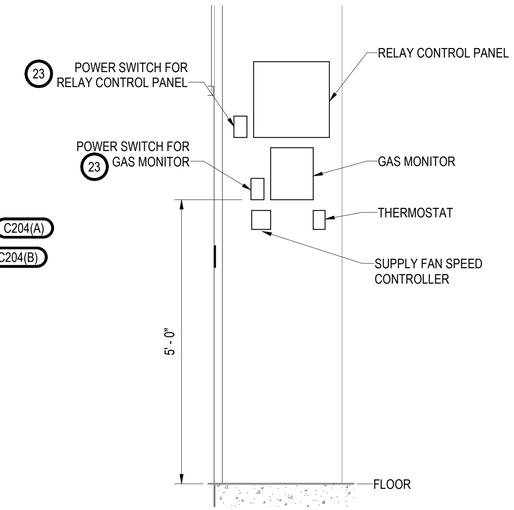

WING WALL
ELEVATION 22 4
SCALE: NONE E30.01

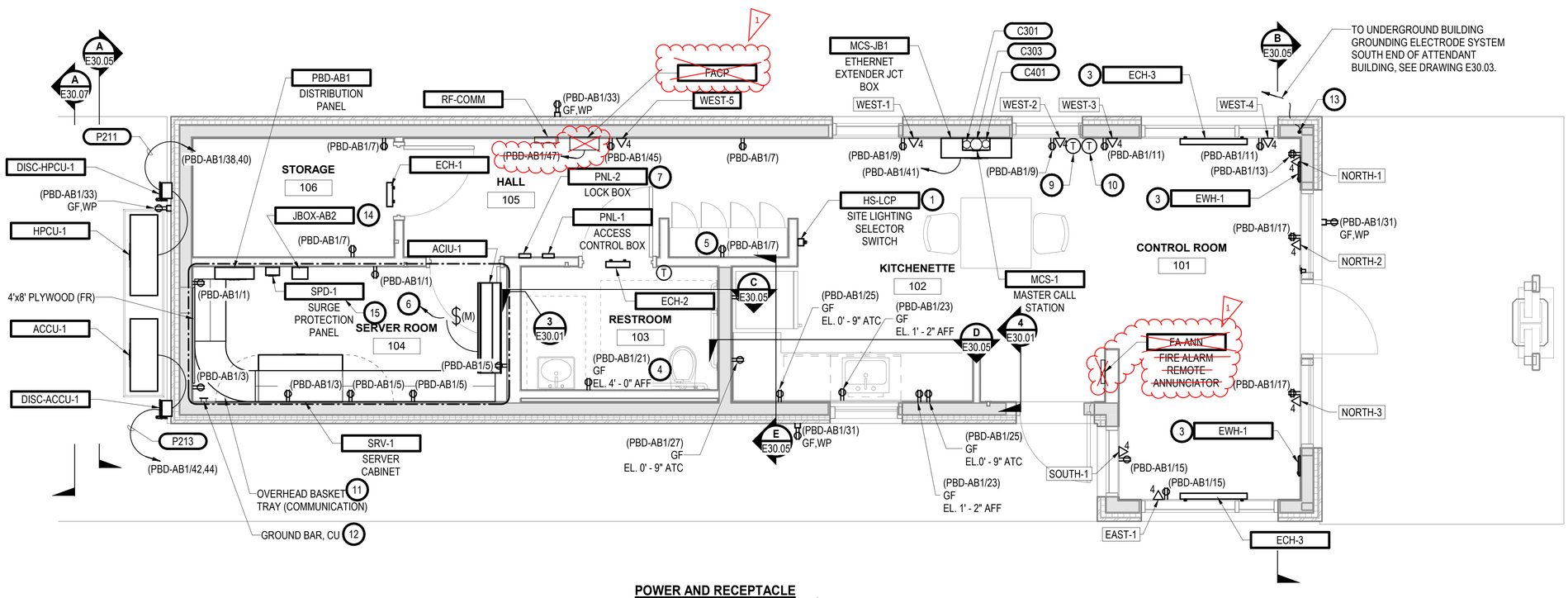

POWER AND RECEPTACLE
PLAN
SCALE: 3/8" = 1'-0"

NOTES:

1. SITE EXTERIOR LIGHTING SELECTOR SWITCHES (H-O-A) FOR BOTH GENERAL PUBLIC AREA AND FOR LOWER TRUCK CONTAINER SERVICE ROAD. THESE SWITCHES CONTROL THE TWO LIGHTING CONTROL PANELS LOCATED ON THE OUTDOOR ELECTRICAL EQUIPMENT RACK. FOR SWITCH CONFIGURATION SEE DETAIL 2.
2. ALL INTERIOR RECEPTACLES AND LIGHT SWITCHES SHALL BE INSTALLED IN RECESSED, IN-WALL MOUNTING ELECTRICAL BOXES.
3. ELECTRIC WALL HEATERS AND ELECTRIC COVE HEATERS ARE ONLY AVAILABLE WHEN CONTROL ROOM HEATER HPIU-1 IS ON. POWERED BY PBD-AB1/14 VIA RELAY BOX.
4. LOCATE RECEPTACLE NOT TO INTERFERE WITH MIRROR OR SINK.
5. LOCATE RECEPTACLE ABOVE LOCKERS.
6. INDOOR UNIT POWERED BY OUTDOOR CONDENSING UNIT. LOCATE SWITCH ON WALL NEAR ACIU-1.
7. LOCK BOX CONTAINS KEY FOR ACCESS INTO SERVER ROOM IN CASE OF LOSS OF POWER.
8. SEE NETWORK SCHEDULE FOR WALL NETWORK OUTLETS.
9. THERMOSTAT FOR EWH-1 SEE MECHANICAL DWG.
10. THERMOSTAT FOR ECH-3, SEE MECHANICAL DWG.
11. MOUNT BASKET TRAY 7'-10" AFF.
12. MOUNT 12" COPPER GROUND BAR 8'-8" AFF. BOND GROUND BAR TO UNDERGROUND GROUNDING ELECTRODE SYSTEM, SEE DWG E30.03. PROVIDE GROUNDING BAR LABEL, "GROUNDING FOR COMMUNICATION SYSTEMS ONLY".
13. BOND GROUNDING ELECTRODE SYSTEM TO BUILDING STEEL COLUMN.
14. JBOX-AB2 IS FOR THE EXTERIOR LIGHTING CONTROLLED BY THE LIGHTING CONTROL PANEL LOCATED AT THE EQUIPMENT RACK SOUTH OF THE ATTENDANT BLDG.
15. SPD-1 IS TO PROVIDE PROTECTION FOR PBD-AB1.
16. CONTRACTOR SHALL PROVIDE CONDUIT AND WIRING FOR ATTENDANT BUILDING. CONDUIT AND WIRING FOR ATTENDANT BUILDING NOT SHOWN FOR DRAWING CLARITY.
17. PVC CONDUIT FOR GROUND BAR GROUND CONDUCTOR.
18. CONDUIT AND CABLES FOR LIGHTING, RECEPTACLES, AND HVAC ARE NOT SHOWN ON DRAWING FOR DRAWING CLARITY. SEE PANELBOARD SCHEDULE FOR AMPERAGE RATING OF CIRCUIT BREAKER THAT FEEDS EQUIPMENT FOR DETERMINING CONDUIT AND CABLE SIZE.
19. MECHANICAL CONTROLS CONTRACTOR SHALL PROVIDE RELAYS FOR HVAC EQUIPMENT. ELECTRICAL CONTRACTOR SHALL PROVIDE DISCONNECT SWITCHES AND LINE VOLTAGE SIDE WIRING TO RELAYS. MECHANICAL CONTRACTOR SHALL PROVIDE LOW VOLTAGE SIDE WIRING TO RELAYS. ELECTRICAL CONTRACTOR SHALL WORK WITH MECHANICAL CONTROLS CONTRACTOR TO INSURE PROPERLY WORKING HVAC SYSTEM.
20. NETWORK COMMUNICATION CABLES TO THE NETWORK DATA JACKS SHALL BE ROUTED TO THE SERVER RACK (SRV-1) IN 1 INCH CONDUIT.
21. PROVIDE #6 GROUND CONDUCTOR FROM THE GROUND BAR TO THE 4' X 8' PLYWOOD. THE GROUND CONDUCTOR SHALL BE XHHW OR THHN AND HAVE GREEN COLOR INSULATION. COIL AN 8' PIGTAIL OF EXTRA GROUND CONDUCTOR AT THE PLYWOOD FOR THE COMMUNICATION PROVIDER USE.
22. SEE MECHANICAL SHEETS M10-05 AND M30.03 FOR HVAC EQUIPMENT ON THIS WING WALL. SEE CONDUIT AND CABLE SCHEDULE FOR WIRING.
23. PROVIDE SINGLE GANG SWITCH COVER, WEATHERPROOF, PVD, CANTEX PART NO. 513331 OR APPROVED EQUAL. PROVIDE SWITCH FUNCTION LABEL.

ISSUE FOR BID

	REVISIONS	DATE	BY
1	ADDENDUM No. 3	12/9/2025	RWR

DESIGNED R. ROHLER
DRAWN J. VONDERAHE
CHECKED C. WITTMAN
APPROVED K. HUFNAGEL

ONE INCH AT FULL SCALE. IF NOT, SCALE ACCORDINGLY
FILE NAME Silverdale RAGF-AB.rvt
JOB No. 553-1578-155
DATE MARCH 2025

ROBERT W. ROHLER STATE OF WASHINGTON 41496 REGISTERED PROFESSIONAL ENGINEER
8/28/2025

KITSAP COUNTY
DEPT. OF PUBLIC WORKS
614 DIVISION STREET MS-26
PORT ORCHARD, WA 98366
TEL:(360) 337-5777 FAX:(360) 337-4867

Parametrix
719 SECOND AVENUE SE, SUITE 100 | SEATTLE, WA 98104
P 206.394.3700
WWW.PARAMETRIX.COM

PROJECT NAME
SILVERDALE RECYCLING AND GARBAGE FACILITY REDEVELOPMENT
KITSAP COUNTY, WASHINGTON

ATTENDANT BUILDING POWER AND RECEPTACLE PLAN

DRAWING NO.
230 OF 239
E30.01

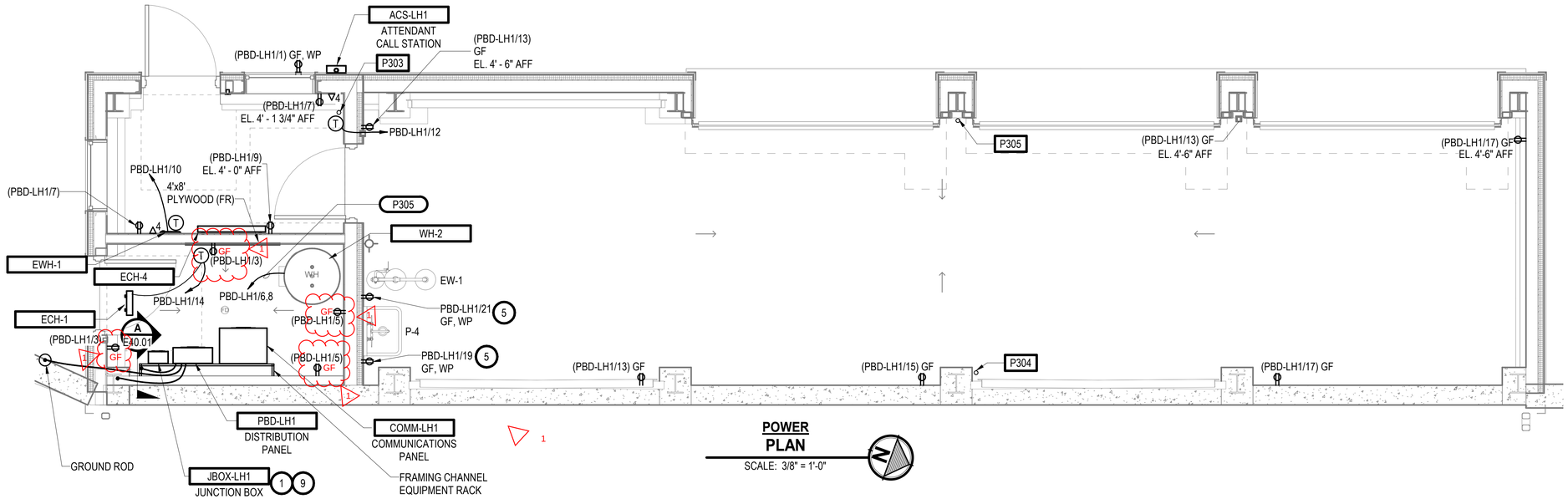

POWER PLAN

SCALE: 3/8" = 1'-0"

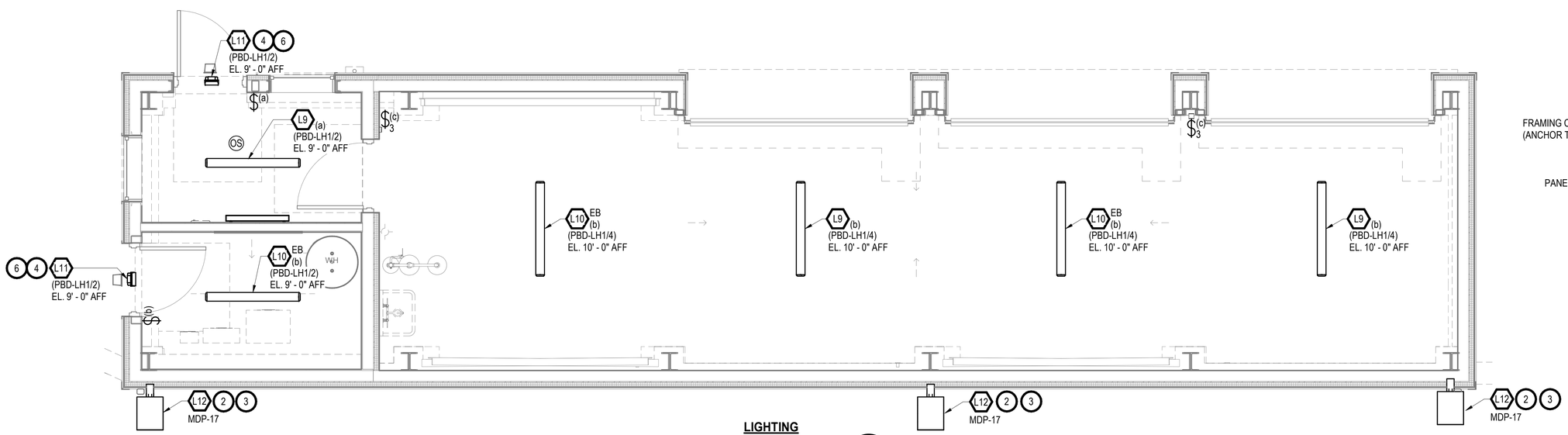

LIGHTING PLAN

SCALE: 3/8" = 1'-0"

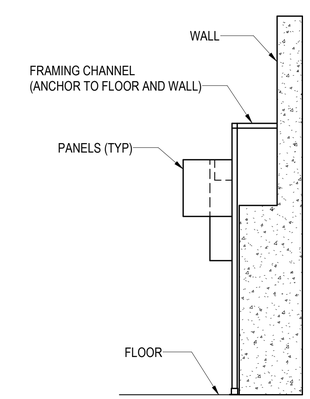

FRAMING CHANNEL EQUIPMENT RACK DETAIL A

SCALE: NONE

NOTES:

1. JBOX-LH1 IS FOR THE EXTERIOR LIGHTING CONTROLLED BY THE LIGHTING CONTROL PANEL, LOCATED AT THE EQUIPMENT RACK SOUTH OF THE ATTENDANT BUILDING.
2. THESE EXTERIOR LIGHT FIXTURES ARE CONTROLLED BY THE LIGHTING CONTROL PANEL LTG-CP2, LOCATED AT THE EQUIPMENT RACK SOUTH OF THE ATTENDANT BUILDING.
3. MOUNTING HEIGHT OF 27' IS ABOVE THE LOWER ROAD ON THE REAR SIDE OF THE LHHW BUILDING. SEE STRUCTURAL DRAWING FOR STEEL STRUCTURE TO BE USED TO SUPPORT EXTERIOR LIGHT FIXTURE ASSEMBLY.
4. NON-SWITCHED CIRCUIT.
5. FOR EQUIPMENT FREEZE PROTECTION.
6. PROVIDE WATER MANAGEMENT MOUNTING BLOCK FOR EXTERIOR LIGHT FIXTURES LOCATED NEAR MAN DOOR OF LHHW BUILDING. COORDINATE WITH CONTRACTOR INSTALLING SIDING ON BUILDING.
7. CONDUIT AND CABLES FOR LIGHTING, RECEPTACLES, AND HVAC ARE NOT SHOWN ON DRAWING FOR DRAWING CLARIFICATION. SEE PANELBOARD SCHEDULE FOR AMPERAGE RATING OF CIRCUIT BREAKER THAT FEEDS EQUIPMENT FOR DETERMINING CONDUIT AND CABLE SIZE.
8. NETWORK COMMUNICATION CABLES TO THE NETWORK DATA JACKS SHALL BE ROUTED TO THE COMMUNICATION PANEL (COMM-LH1) IN 1 INCH CONDUIT.
9. PROVIDE GROUND ROD AND BOND TO PANELBOARD PBD-LH1 FEEDER EQUIPMENT GROUND CONDUCTOR PER NEC 250.32. BOND TO BUILDING STEEL STRUCTURAL COLUMN. USE #6 COPPER CONDUCTOR FOR BONDING.

ISSUE FOR BID

	REVISIONS	DATE	BY
1	ADDENDUM No. 3	12/9/2025	RWR

DESIGNED R. ROHLER
DRAWN D. MILES
CHECKED C. WITTMAN
APPROVED K. HUFNAGEL

ONE INCH AT FULL SCALE. IF NOT, SCALE ACCORDINGLY
FILE NAME Silverdale RAGF-LH.rvt
JOB No. 553-1578-155
DATE MARCH 2025

ROBERT W. ROHLER, STATE OF WASHINGTON, 41496, REGISTERED PROFESSIONAL ENGINEER
8/28/2025

KITSAP COUNTY DEPT. OF PUBLIC WORKS
614 DIVISION STREET MS-26
PORT ORCHARD, WA 98366
TEL:(360) 337-5777 FAX:(360) 337-4867

Parametrix
719 SECOND AVENUE SE, SUITE 100 | SEATTLE, WA 98104
P 206.394.3700
WWW.PARAMETRIX.COM

PROJECT NAME
SILVERDALE RECYCLING AND GARBAGE FACILITY REDEVELOPMENT
KITSAP COUNTY, WASHINGTON

LIMITED HHW BUILDING POWER AND LIGHTING PLANS

DRAWING NO. 237 OF 239
E40.01